INSTALLATION MANUAL

eCopilot

Version 1.03

February 2021

www.lxnav.com

1 Important Notices

The LXNAV system is designed for VFR use only as an aid to prudent navigation. All information is presented for reference only. Terrain, airports and airspace data are provided only as an aid to situation awareness.

Information in this document is subject to change without notice. LXNAV reserves the right to change or improve their products and to make changes in the content of this material without obligation to notify any person or organisation of such changes or improvements.

A Yellow triangle is shown for parts of the manual which should be read very carefully and are important for operating the system.

Notes with a red triangle describe procedures which are critical and may result in loss of data or any other critical situation.

A bulb icon is shown when a useful hint is provided to the reader.

1.1 Limited Warranty

This LXNAV product is warranted to be free from defects in materials or workmanship for two years from the date of purchase. Within this period, LXNAV will, at its sole discretion, repair or replace any components that fail in normal use. Such repairs or replacement will be made at no charge to the customer for parts and labour, provided that the customer shall be responsible for any transportation cost. This warranty does not cover failures due to abuse, misuse, accident, or unauthorised alterations or repairs.

THE WARRANTIES AND REMEDIES CONTAINED HEREIN ARE EXCLUSIVE AND IN LIEU OF ALL OTHER WARRANTIES EXPRESSED OR IMPLIED OR STATUTORY, INCLUDING ANY LIABILITY ARISING UNDER ANY WARRANTY OF MERCHANTABILITY OR FITNESS FOR A PARTICULAR PURPOSE, STATUTORY OR OTHERWISE. THIS WARRANTY GIVES YOU SPECIFIC LEGAL RIGHTS, WHICH MAY VARY FROM STATE TO STATE.

IN NO EVENT SHALL LXNAV BE LIABLE FOR ANY INCIDENTAL, SPECIAL, INDIRECT OR CONSEQUENTIAL DAMAGES, WHETHER RESULTING FROM THE USE, MISUSE, OR INABILITY TO USE THIS PRODUCT OR FROM DEFECTS IN THE PRODUCT. Some states do not allow the exclusion of incidental or consequential damages, so the above limitations may not apply to you. LXNAV retains the exclusive right to repair or replace the unit or software, or to offer a full refund of the purchase price, at its sole discretion. SUCH REMEDY SHALL BE YOUR SOLE AND EXCLUSIVE REMEDY FOR ANY BREACH OF WARRANTY.

To obtain warranty service, contact your local LXNAV dealer or contact LXNAV directly.

May 2016

2 Introduction

The printed version of this installation manual is in grayscale. Some figures and diagrams are coloured. Please refer to electronic version to see colours. The latest electronic version of this manual can be downloaded from http://www.lxnav.com section downloads-manuals.

This manual will guide you through the installation process of all systems, components, basic setup and check of the system.

Before using any part of the system, please read and understand the installation and user manuals!

There are no serviceable parts within the unit, hence the unit must be taken to the factory for service.

Opening the unit by the user will void warranty and airworthiness.

3 What is included in package

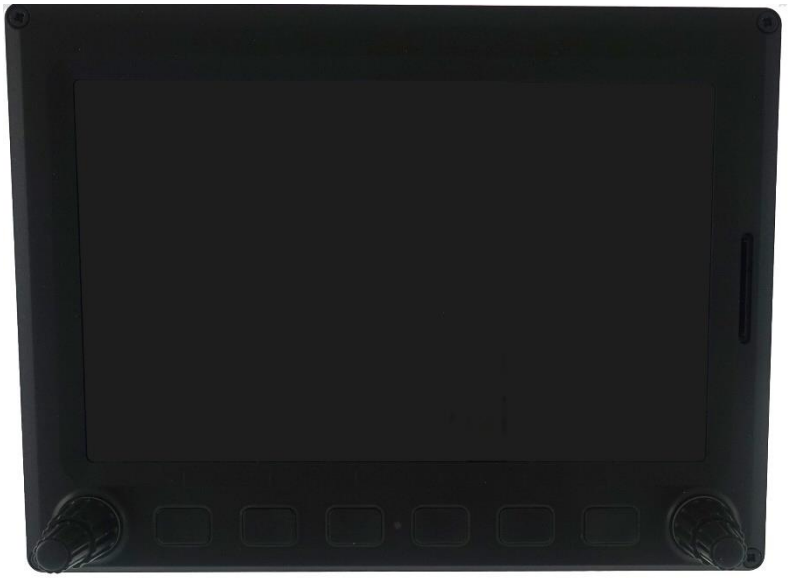

4 System Planning

In this chapter the installer will be informed how and where particular equipment items can be installed. Some items have environmental and location requirements, others not.

4.1 Power Consumption

Some modules obtain power from the main unit. These modules do not need a circuit breaker as the main unit takes care of this. Other items of equipment that have their own power supply should have specified circuit breakers installed.

	Approximate Current Consumption at 12V DC	**Recommended Circuit Breaker**
eCopilot10	800mA (at max. brightness)	3A
eCopilot7	800mA (at max. brightness)	3A
eBox	30mA	-
sBox		-

4.2 Power Supply

	Min. Voltage	**Nominal Voltage**	**Max. Voltage**
eCopilot10	9V	12V	28V
eCopilot7	9V	12V	28V
eBox	9V	12V	26V (optional to 36V)
sBox	9V	12V	28V

4.3 Dimensions and Weights

	Dimensions	**Weight**
eCopilot10	256 x 176 x 55,5 mm	917 g
eCopilot7	182 x 136 x 56 mm	615 g
eBox	131 x 76 x 22 mm	232 g
sBox	105 x 57 x 34 mm	302 g

4.4 Temperature Specifications

	Storage Temperature	Operating Temperature
eCopilot10	-40°C to +80°C	-30°C to +60°C
eCopilot7	-40°C to +80°C	-30°C to +60°C
eBox	-40°C to +80°C	-30°C to +60°C
sBox	-40°C to +80°C	-30°C to +60°C

4.5 Location Requirements

4.5.1 eCopilot10

- Requires 56 mm of space behind the panel.
- There is no need for additional space for harness.
- Choose a position so that the display will be viewable.

4.5.2 eCopilot7

- Requires 56 mm of space behind the panel.
- There is no need for additional space for harness.
- Choose a position so that the display will be viewable.

4.5.3 sBox (Sensor box)

- The sBox harness needs additional XX mm space
- Some space should be taken in account also for the pito-static tubes connection
- Choose a position near CG of plane

4.5.4 eBox (Engine box)

- It's recommended to be installed behind firewall (cockpit side)
- The eBox harness needs additional XX mm space
- Choose a position near CG of plane

4.6 Grounding and power supply requirements

High current consumers (radio, transponders,…) must be separated from eCopilot system with separate power line.
Never use airframe as a source of the ground. Air frame must be grounded only on one place, where is connected to the battery. Currents through airframe are not recommended.

4.7 Cooling Requirements

Currently there are no cooling requirements. If possible, ventilation should pass through the instrument panel to exchange some warm air. That will drop the temperature behind the panel a few degrees.

4.8 Mounting Requirements

Most LXNAV units are fastened with screws.

5 Overview of the System

5.1 Overview

The LXNAV system consists of many different displays, units and sensors which talk to each other via the CAN bus.

5.2 Communication BUS

Most devices in LXNAV system talk to each other via the CAN bus. We use standard M12mm NMEA connectors. Bus must be terminated at the beginning and end of chain with CAN terminators.

Another way of communication with peripheral devices is via the RS232 serial interface. This interface is mostly used to connect 3rd party devices into the LXNAV system (external Flarm, ADSB,…). For each device we have a specially designed cable. The RS232 connection should be done by RJ12connector on the back side of eCopilot unit.

5.3 Harness and Cables

The main unit cable has two power supply wires (red for positive +12V DC and blue for ground potential. Third wire can be optionally connected to auxiliary power supply.

5.4 Available Cables and Harnesses

Cable Part Number	Description
CAN BUS cable 0.5m	
CAN BUS cable 1m	
CAN BUS cable 2m	
CAN BUS cable 3m	
CAN BUS terminator (male)	
CAN BUS terminator (female male)	

5.5 Examples of Systems

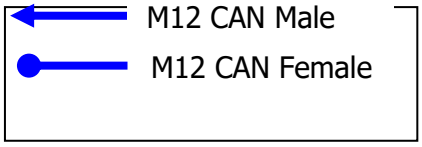

Basic Installation

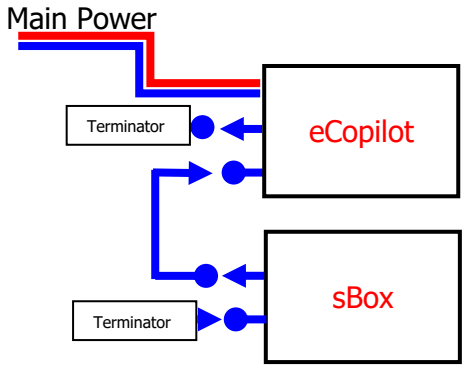

Installation with S10x vario

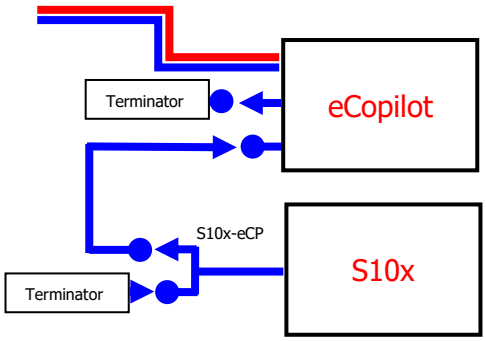

More complex installation

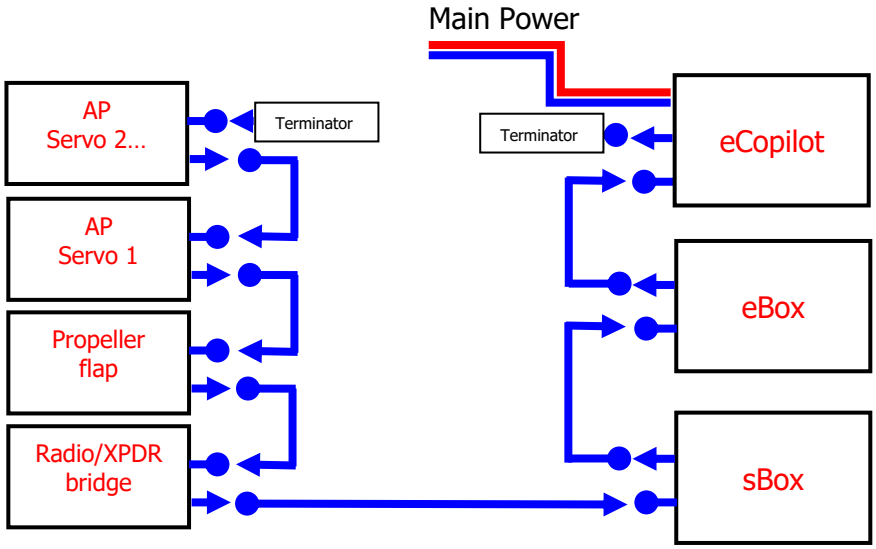

General Connection Options

6 Installation and Configuration

6.1 Main Unit and Repeater Unit

Before cutting out the panel the whole cutting plan of the panel, including all indicators, must be prepared. The next figure shows the cut-outs for all types of units that can be installed into the panel.

Prepare the cut-out in the instrument panel according to the drilling template or DWG document. Position the unit in the cut-out in the instrument panel. Tighten the unit with attached 2.5 mm screws.

6.1.1 Installation of Options

6.1.2 Cut-Outs

6.1.2.1 eCopilot10

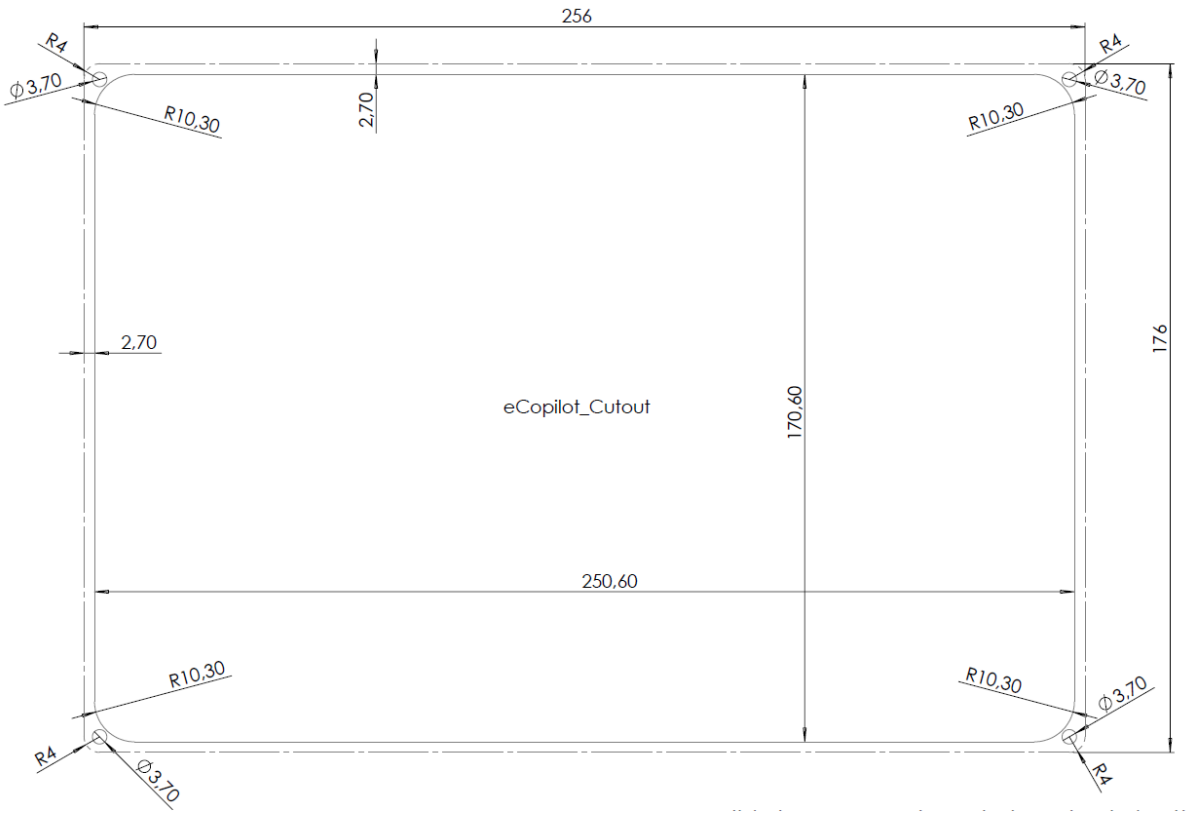

Drawing is not to scale

6.1.2.2 eCopilot7

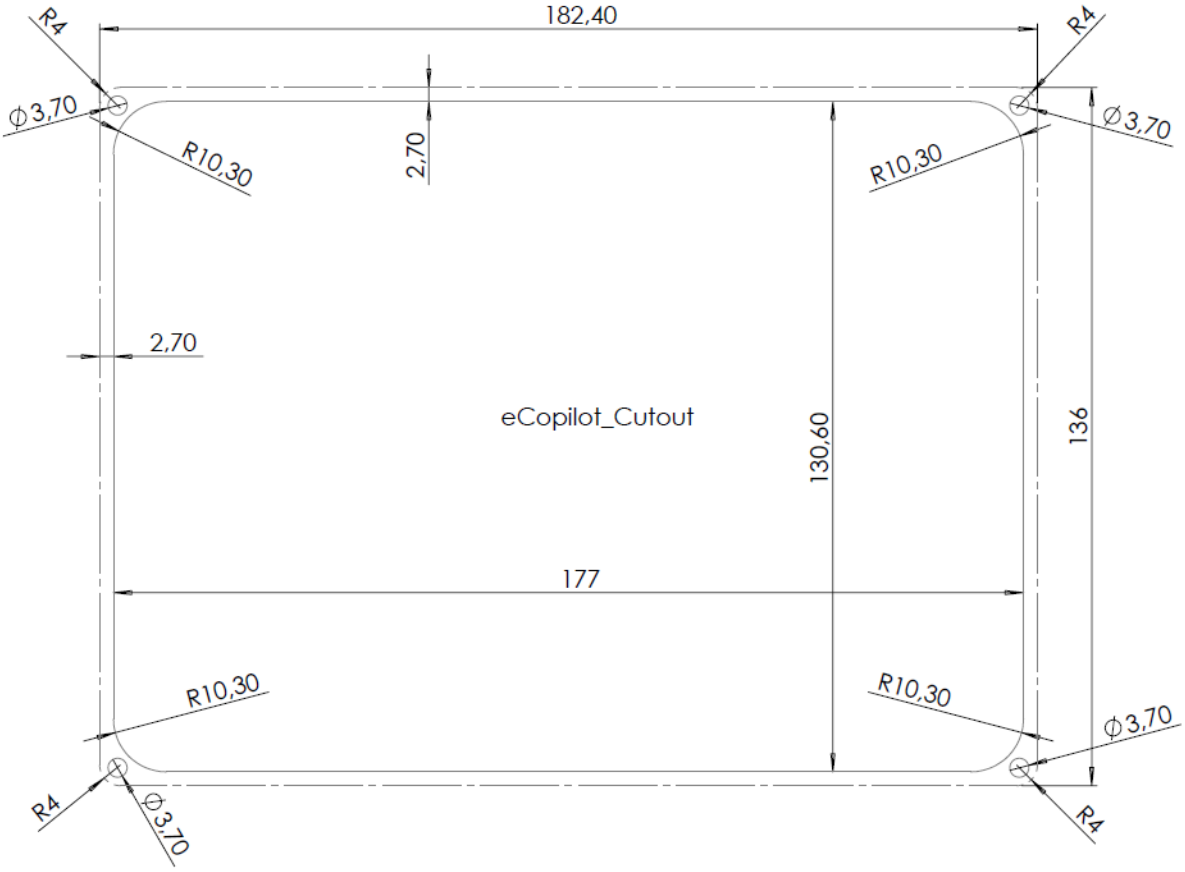

Drawing is not to scale

6.1.3 Dimensions

6.1.3.1 eCopilot10

6.1.3.2 eCopilot7

Flarm port

Flarm antenna

GPS antenna

6.1.4 Ports

6.1.4.1 eCopilot10

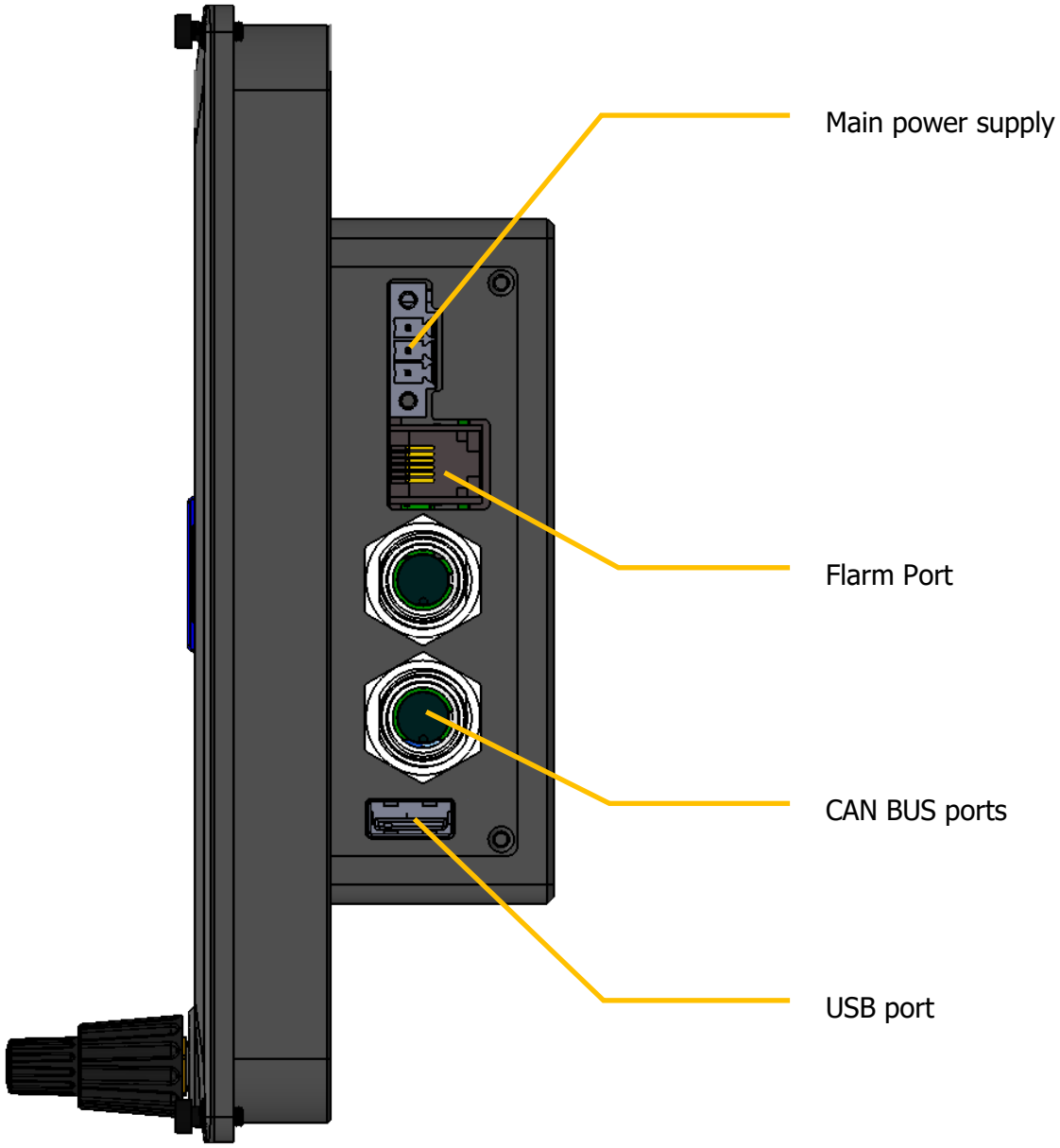

6.1.4.2 eCopilot7

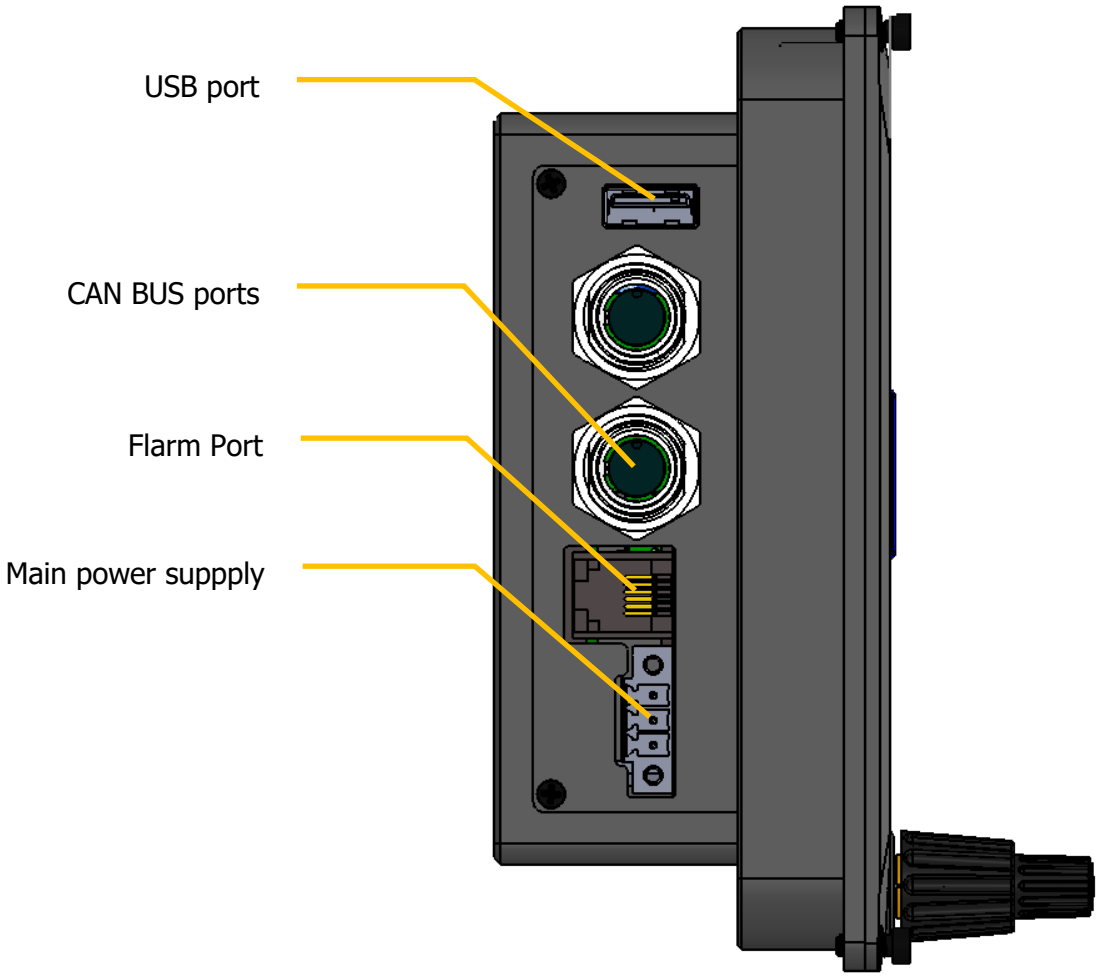

6.1.4.3 Main Power supply

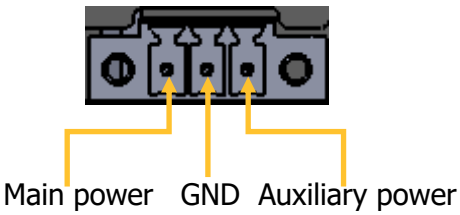

Ecopilot has two battery inputs. One is primary and another is auxiliary. If primary fails or turns off. eCopilot will continue to work on auxiliary battery. It will start counting down to shut down. User can interrupt this count down.

.

6.1.4.4 Flarm Port

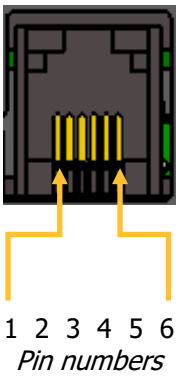

Pin Number	Description
1	(output) 12V DC, to supply GPS
2	(output) 3.3V DC (max 100mA)
3	GND
4	Data In
5	Data Out
6	Ground

On flarm port can be directly connected Flarm mouse or NANOx via NanoPower and CC-NP-LX cable.

6.1.4.5 CAN BUS ports

One CAN BUS port is male, another is female. Can bus must be terminated with CAN BUS terminator on beginning and on end of CAN BUS line.

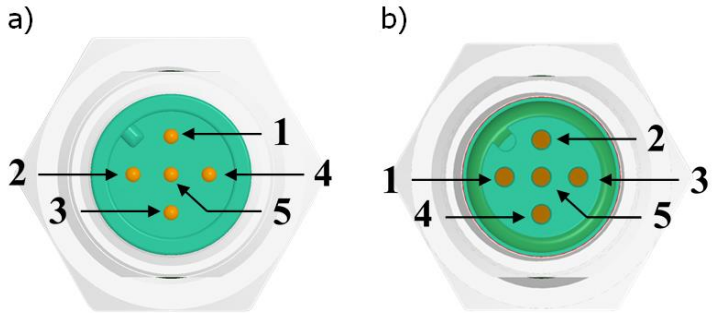

Figure 1: Pinout of M12 connectors a) male b) female

Table 1: M12 connector pinout

Pin Number	Type	Description
1	Shield	Cable shielding pin
2	PWR	Positive power supply
3	GND	Ground pin
4	CAN-H	CAN high signal line
5	CAN-L	CAN low signal line

6.1.4.6 USB Port

USB port can be used for data transfer via memory stick, to plug in WiFi Module and other compatible devices.

6.1.1 Wiring

6.2 Connection and Functionality Check of All Peripheral Units

The main display unit is connected to 12 Volt power via the 3 pin connector. The main All other units are connected via CAN bus.
Please ensure that all units are connected correctly before the first power on. The power wires (red and blue) should be connected to the main display unit.

It is VERY IMPORTANT to use an external fuse (max. 3A). Power supply cables should use a minimum of 0.5 mm² AWG20 wires.

6.2.1.1 Wiring

6.2.1.2 Connection to the CAN Bus

6.2.1.3 Pneumatics

6.2.1.4 Audio

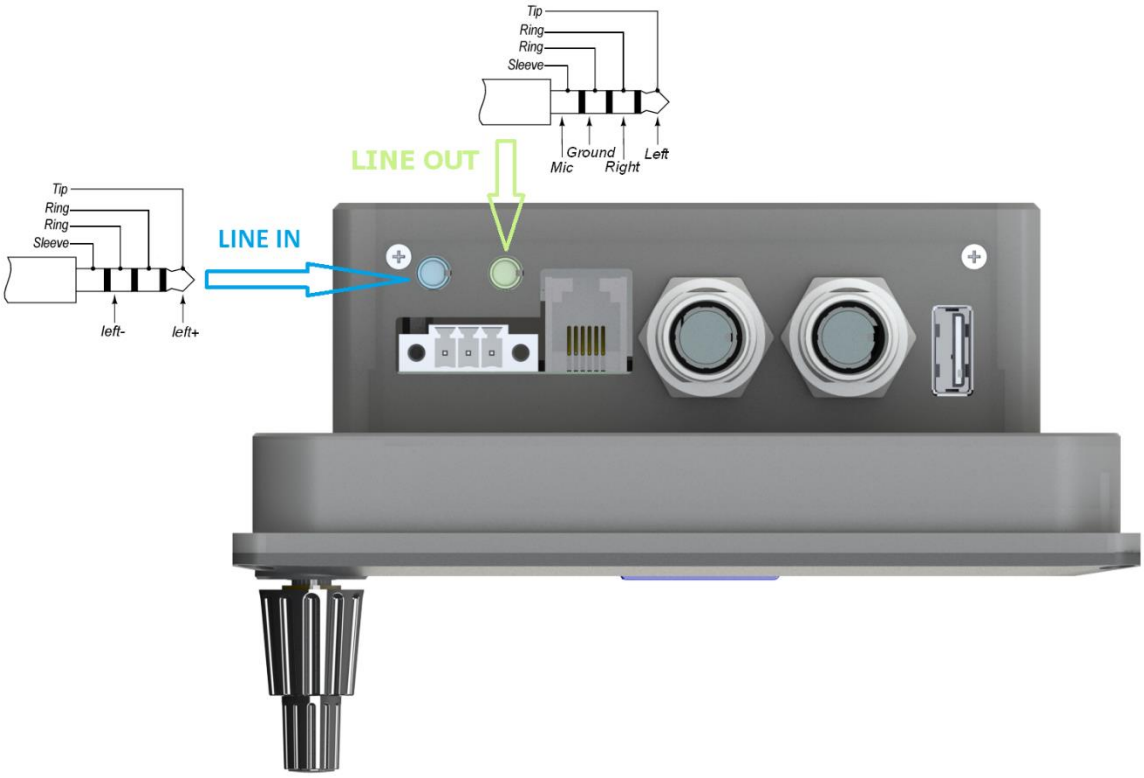

6.2.2 Installation of Options

6.2.2.1 Remote Sticks

6.2.2.2 Flarm receiver

Flarm compatible unit (PowerMouse with ADSB) can be directly connected to the Flarm port.

6.2.2.3 Flap Sensor

Flap sensor can be used to measure deflection of controls (elevator, rudder, ailerons or flaps).

6.2.2.3.1 NMEA Bridge

The NMEA Bridge has been designed to expand a number of NMEA ports in the system. It can be used as classic NMEA output for PDA device to feed a Mode-S transponder with NMEA.

6.2.2.3.2 Radio Bridge

The Radio Bridge is the same part of hardware as the NMEA Bridge. On the main unit it can be configured as a Radio Bridge which can communicate with supported radios (for more information please refer to the Radio/Transponder Bridge manual).

6.2.2.3.3 Transponder Bridge

The Transponder Bridge is the same part of hardware as the NMEA Bridge. On the main unit it can be configured as a Transponder Bridge which can communicate with the supported Transponders (for more information please refer to the Radio/Transponder Bridge manual).

6.2.2.3.4 CAN2CAN – Rotax 912IS

The CAN2CAN bridge is used whenever device with different CAN speed/protocol wants to be connected to LX CAN BUS (eCopilot). Female SUB D9 connector on CAN2CAN adapter is used for LX CAN and male SUB D9 for Rotax 912IS engine. Pinout is same on both sides, but power is required only on LX side via appropriate CAN2CAN M12 cable.

Connector pinout for LX CAN BUS SUBD9	
Pin	**Description**
1	-
2	CAN-L
3	GND
4	-
5	-
6	-
7	CAN-H
8	-
9	PWR

Connector pinout for Rotax 912IS CAN BUS	
Pin	**Description**
1	-
2	CAN-L
3	GND
4	-
5	-
6	-
7	CAN-H
8	-
9	-

6.2.2.4 Wi-Fi Module

The Wi-Fi dongle must be plugged into a USB port. The Wi-Fi dongle will be operational when the unit which will have enabled that option and the wireless network are available.

6.2.2.5 Compass Module

The compass module must be connected to the RS485 bus. It must be installed at a location where there are no strong magnetic fields (iron or ferromagnetic materials) or cables with AC current or fluctuating DC currents.

When installing the magnetic compass use screws made of non-ferromagnetic materials (plastic or brass).

Orientation of the compass module marked on the housing as shown on picture above.

7 Troubleshooting

7.1 Export Diagnostic Files

A Diagnostic file can be downloaded from the main unit under **Setup-About**. If a SD card is in the SD socket the user can copy the diagnostic file to the SD card. If a Wi-Fi module is plugged in and wireless network is available the user can send this file over EMAIL directly to LXNAV.

8 Revision History

Rev	Date	Comments
1	May 2016	Initial release of installation manual
2	November 2018	Modified chapter 6.1.4.5 Added chapter 6.2.2.3.4
3	January 2019	Modified chapter 6.1.4.4
4	October 2019	Updated chapter 6.1.4.3
5	February 2021	Style update

The pilot's choice

LXNAV d.o.o.
Kidričeva 24, SI-3000 Celje, Slovenia
T: +386 592 334 00 I F:+386 599 335 22 I info@lxnav.com
www.lxnav.com