eBox

Installation Manual

Version 1.5

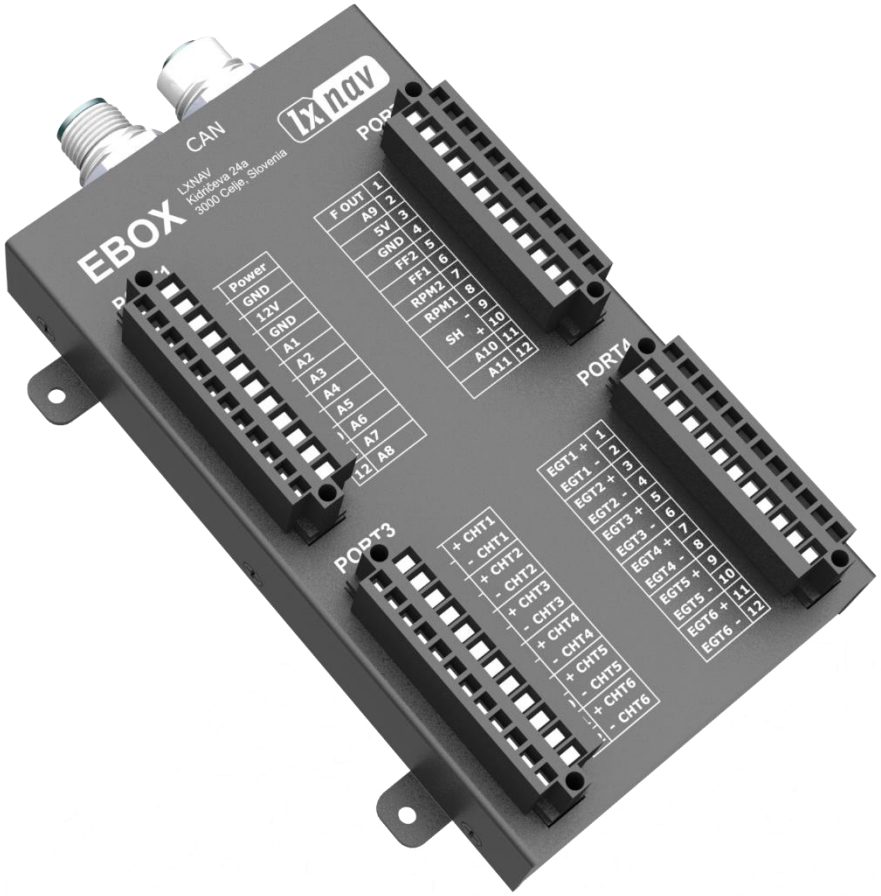

lx nav

LXNAV d.o.o. • Kidričeva 24a, 3000 Celje, Slovenia • tel +386 592 33 400 fax +386 599 33 522
info@lxnav.com • www.lxnav.com

1. Important Notices 3
1.1. Limited Warranty 4
2. Installations 5
2.1. Packing Lists 5
2.2. Basics 5
2.3. Installation 6
2.3.1. Power supply connections 9
2.3.2. Sensors 10
2.3.2.1. CHT and EGT 10
2.3.2.2. Fuel flow 11
2.3.2.3. Fuel level 12
I. Fuel level calibration 13
2.3.2.4. RPM 14
2.3.2.5. Shunt 17
2.3.2.6. Oil pressure 18
2.3.2.7. Fuel pressure 19
2.3.2.8. Oil temperature 19
2.3.2.9. Outside air temperature (OAT) 20
2.3.2.10. Manifold pressure sensor 21
2.3.2.11. Lambda controller 22
2.3.3. CAN bus 23
2.4. Dimensions 24
2.4.1. Mounting requirements 24
2.5. Functionality check 25
2.6. Configuring sensors in eBox menu on eCopilot 25
2.7. Updating firmware of eBox 26
2.8. Compatible sensors 27
2.9. Troubleshooting 29
3. Revision History 30

1. Important Notices

Information in this document is subject to change without notice. LXNAV reserves the right to change or improve their products and to make changes in the content of this material without obligation to notify any person or organisation of such changes or improvements.

A Yellow triangle is shown for parts of the manual which should be read very carefully and are important for operating the system.

Notes with a red triangle describe procedures which are critical and may result in loss of data or any other critical situation.

A bulb icon is shown when a useful hint is provided to the reader.

1.1. Limited Warranty

This LXNAV product is warranted to be free from defects in materials or workmanship for two years from the date of purchase. Within this period, LXNAV will, at its sole discretion, repair or replace any components that fail in normal use. Such repairs or replacement will be made at no charge to the customer for parts and labour, provided that the customer shall be responsible for any transportation cost. This warranty does not cover failures due to abuse, misuse, accident, or unauthorised alterations or repairs.

THE WARRANTIES AND REMEDIES CONTAINED HEREIN ARE EXCLUSIVE AND IN LIEU OF ALL OTHER WARRANTIES EXPRESSED OR IMPLIED OR STATUTORY, INCLUDING ANY LIABILITY ARISING UNDER ANY WARRANTY OF MERCHANTABILITY OR FITNESS FOR A PARTICULAR PURPOSE, STATUTORY OR OTHERWISE. THIS WARRANTY GIVES YOU SPECIFIC LEGAL RIGHTS, WHICH MAY VARY FROM STATE TO STATE.

IN NO EVENT SHALL LXNAV BE LIABLE FOR ANY INCIDENTAL, SPECIAL, INDIRECT OR CONSEQUENTIAL DAMAGES, WHETHER RESULTING FROM THE USE, MISUSE, OR INABILITY TO USE THIS PRODUCT OR FROM DEFECTS IN THE PRODUCT. Some states do not allow the exclusion of incidental or consequential damages, so the above limitations may not apply to you. LXNAV retains the exclusive right to repair or replace the unit or software, or to offer a full refund of the purchase price, at its sole discretion. SUCH REMEDY SHALL BE YOUR SOLE AND EXCLUSIVE REMEDY FOR ANY BREACH OF WARRANTY.

To obtain warranty service, contact your local LXNAV dealer or contact LXNAV directly.

August 2017 © 2017 LXNAV. All rights reserved.

2. Installations

2.1. Packing Lists

- 1x eBox
- 4x spring connector

2.2. Basics

Ebox is measuring system for engine and other physical parameters. It is standard part of eCopilot, to which is connected over CAN connector on side. Ebox cannot be powered from CAN cable and requires external power connection to provide enough stable power to itself and sensors. Power to unit is applied over headers on top of Ebox which can be also used as analog or digital inputs from sensors. It has metal enclosure with tabs on side for mounting. On top side are labels for pins on all four ports and serial number.

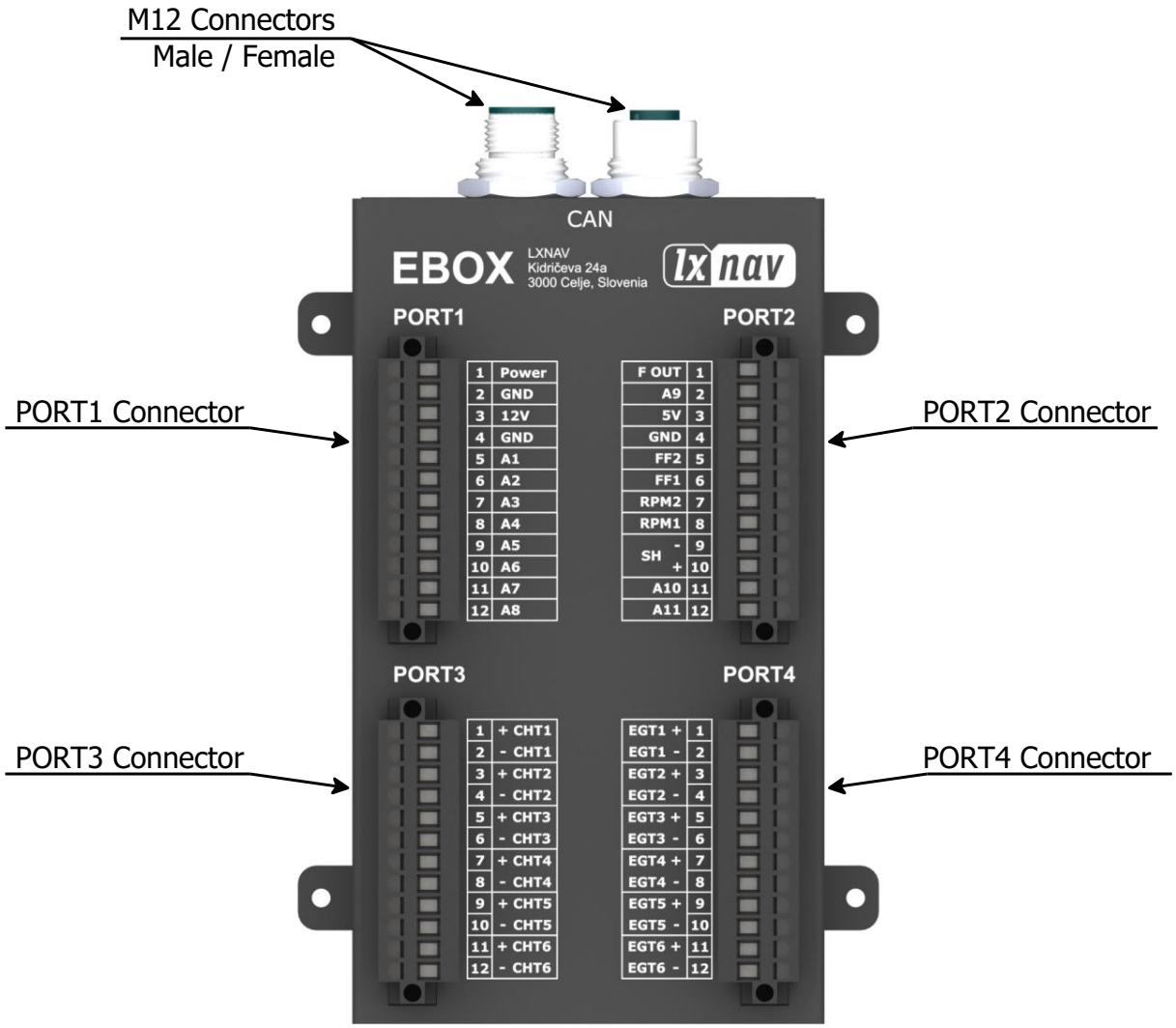

Figure 1: Connectors on eBox

Table 1: Absolute maximum ratings

Parameter	Symbol	Rating	Units
Power Supply	Power	26.0	V
Maximum Power Consumption (without sensors connected to Ebox)	I_1	100	mA
Power Consumption (at full load)	I_2	560	mA
Current on +5V Output	I_{5V}	500	mA
Current on +12V Output	I_{12V}	300	mA
AN1 ... AN11	ANxx	5.0	V
RPM1	RPM1	100.0	V
RPM2	RPM2	24.0	V
FF1 ... FF2	FFx	5.0	V
CHT1 ... CHT6	CHTx	5.0	V
EGT1 ... EGT6	EGTx	5.0	V
SHUNT	SHUNT	5.0	V
FOUT[1]	FOUT	25.0	V

(1) FOUT is an open-drain output. User must provide an external pullup to the desired voltage (max. 60V)

Table 2: Electrical characteristics

Parameter	Symbol	Min	Typ	Max	Units
Power Supply	Power	9.0	12.0	26.0	V
Voltage on +5V Output	1. 5V	4.5	5.0	5.5	V
Voltage on +12V Output	12V	8.5	12.0	12.5	V
RPM1 Triggering Voltage	RPM1	10.0	-	-	V
RPM2 Triggering Voltage	RPM2	1.0	-	-	V

2.3. Installation

In this chapter you will be informed how to properly setup eBox, sensors and CAN communication. Ebox has several pins with different configurations. They are separated by their function for differential sensors and on analog or digital sensors. Differential are mostly used for thermocouple temperature sensors and current sensing resistor as well as some others sensors. They have dedicated pins on PORT2 (CHT1 ... CHT6), PORT4 (EGT1 ... EGT6) and on PORT3.9 with PORT3.10 (Shunt). Pins assigned with Axx (xx = 1 ... 11) are analog inputs for sensors with analog output or resistive sensors. Take care because some sensor may need external pull-up or pull-down resistors. Other pins have special functions for measuring RPM and frequency from fuel flow sensor. Special pin on PORT2 is pin labeled FOUT. It can be programmed as frequency output.

In this manual, each pin on port is labeled, for example, as PORT2.3. This means, the pin is located in third row on port number two. Wires are fitted into headers with spring locks. Strip the insulation from the wire in length of around 8 mm, lightly spin them, push small flat screw driver in desired slot and then place wire to hole that opens opposite to screw driver. If hole for a wire is not opened enough, do not twist it, take thicker screw driver! At the end it is mandatory to screw headers to eBox, preventing them to fall off.

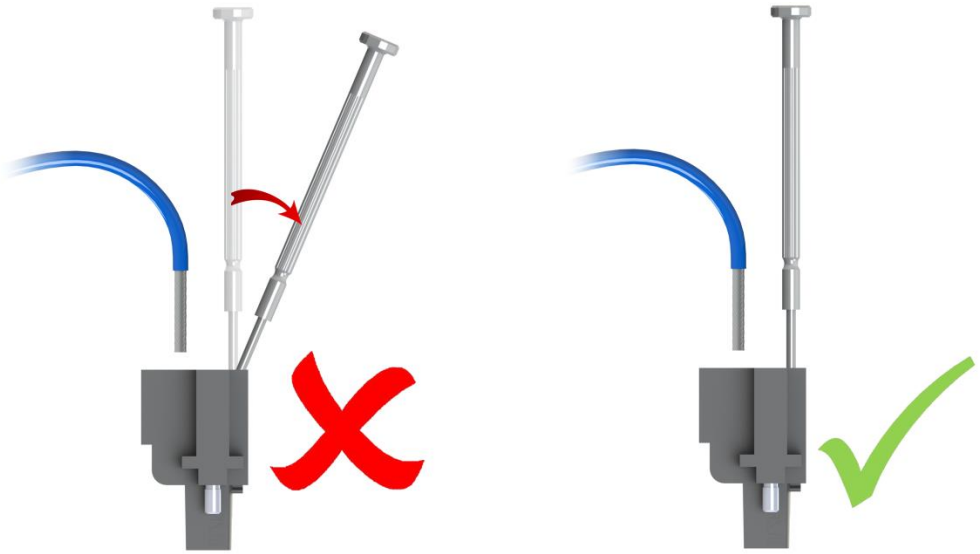

Figure 2: Example of wrong and correct inserting of screwdriver and wire

Table 3: eBox header pinout

Port	Pin	Type	Func	Description
1	1	Power	P	positive power supply for unit
1	2	GND	P	ground power supply for unit
1	3	12V	P	+12 V output power supply for external sensors
1	4	GND	P	ground pin
1	5	A1	AI	general analog input channel 1
1	6	A2	AI	general analog input channel 2
1	7	A3	AI	general analog input channel 3
1	8	A4	AI	general analog input channel 4
1	9	A5	AI	general analog input channel 5
1	10	A6	AI	general analog input channel 6
1	11	A7	AI	general analog input channel 7
1	12	A8	AI	general analog input channel 8
2	1	FOUT	DO	Selectable frequency output pin
2	2	A9	AI	general analog input pin 9
2	3	5V	P	+5 V output power supply for external sensors
2	4	GND	P	ground pin
2	5	FF2	DI	Fuel flow sensor digital pin 2
2	6	FF1	DI	Fuel flow sensor digital pin 1
2	7	RPM2	DI	RPM measuring digital pin 2
2	8	RPM1	DI	RPM measuring digital pin 1
2	9	SH-	AI	Shunt sensor analog input pin -
2	10	SH+	AI	Shunt sensor analog input pin +
2	11	A10	AI	general analog input pin 10
2	12	A11	AI	general analog input pin 11
3	1	CHT1+	AI	differential analog pin of positive polarity, channel 1
3	2	CHT1-	AI	differential analog pin of negative polarity, channel 1
3	3	CHT2+	AI	differential analog pin of positive polarity, channel 2
3	4	CHT2-	AI	differential analog pin of negative polarity, channel 2
3	5	CHT3+	AI	differential analog pin of positive polarity, channel 3
3	6	CHT3-	AI	differential analog pin of negative polarity, channel 3
3	7	CHT4+	AI	differential analog pin of positive polarity, channel 4
3	8	CHT4-	AI	differential analog pin of negative polarity, channel 4
3	9	CHT5+	AI	differential analog pin of positive polarity, channel 5
3	10	CHT5-	AI	differential analog pin of negative polarity, channel 5
3	11	CHT6+	AI	differential analog pin of positive polarity, channel 6
3	12	CHT6-	AI	differential analog pin of negative polarity, channel 6
4	1	EGT1+	AI	differential analog pin of positive polarity, channel 1
4	2	EGT1-	AI	differential analog pin of negative polarity, channel 1
4	3	EGT2+	AI	differential analog pin of positive polarity, channel 2
4	4	EGT2-	AI	differential analog pin of negative polarity, channel 2
4	5	EGT3+	AI	differential analog pin of positive polarity, channel 3
4	6	EGT3-	AI	differential analog pin of negative polarity, channel 3
4	7	EGT4+	AI	differential analog pin of positive polarity, channel 4
4	8	EGT4-	AI	differential analog pin of negative polarity, channel 4
4	9	EGT5+	AI	differential analog pin of positive polarity, channel 5
4	10	EGT5-	AI	differential analog pin of negative polarity, channel 5
4	11	EGT6+	AI	differential analog pin of positive polarity, channel 6
4	12	EGT6-	AI	differential analog pin of negative polarity, channel 6

P – power, AI – analog input, DI – digital input, DO – digital output

2.3.1. Power supply connections

eBox is powered via "Power input" (Figure 3 – PORT1.1 and PORT1.2). For this connection the recommended wire size is AWG20 (Minimal voltage drop).

Additionally, eBox provides two power outputs for sensors:

- +5V power output: PORT2.3 and PORT2.4 are intended for supplying 5V power to active sensors and external pullups. Maximum specified current rating is 0.5A.
- +12V power output: PORT1.3 and PORT1.4 are intended for supplying 12V power to active sensors and external pullups. Maximum specified current rating is 0.3A.

For exact sensor measuring is necessary to connect all power and ground lines as close as possible to eBox. Best option is to use ground pins on headers, otherwise use power splitters near eBox.

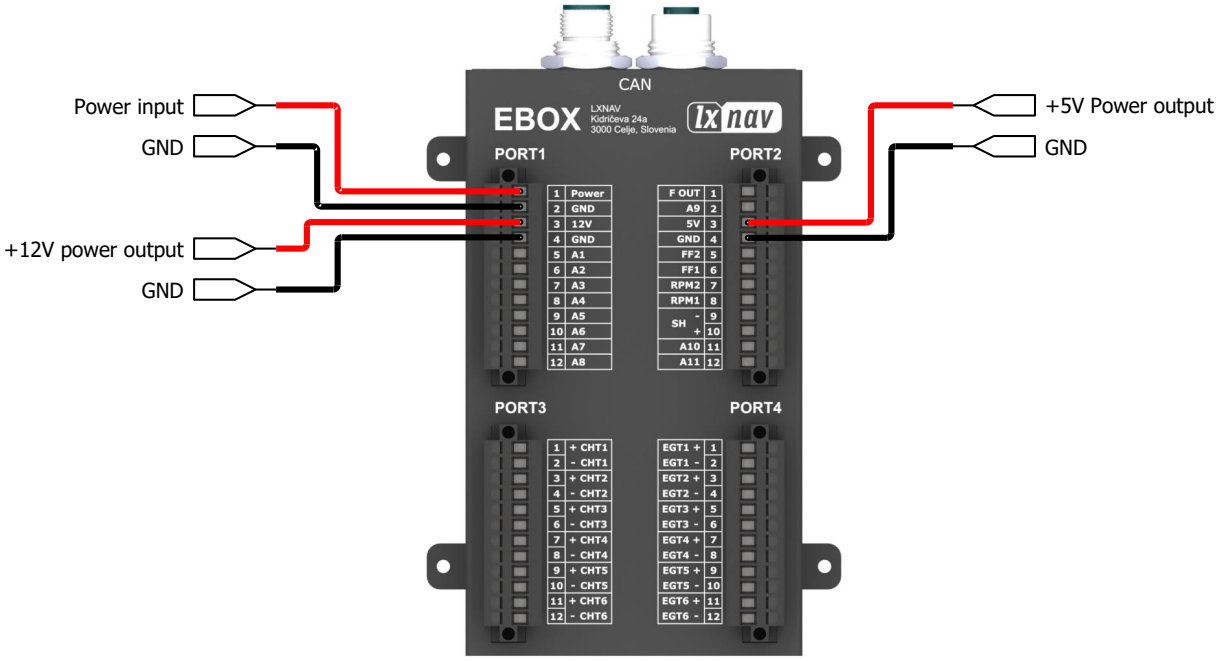

Figure 3: eBox power connections

2.3.2. Sensors

2.3.2.1. CHT and EGT

Both CHT (cylinder head temperature) and EGT (exhaust gas temperature) thermocouple temperature sensors can be any type (J-type, K-type, etc.) and have reserved twelve pairs of differential pins for six cylinders and their exhaust pipes on PORT3 and PORT4. Each thermocouple sensor has two wires that have to be wired to dedicated pins. CHT sensor for cylinder 1 connects to pins dedicated for CHT1 on PORT3 as well as EGT on this cylinder to EGT1 pins on PORT4.

Figure 4 shows connection of a CHT K-type thermocouple to eBox. Wire colors shown, are only for K-type thermocouples. For other thermocouple types and wire colors, please consult Table 4. Mismatched wires on the same port (+ and – reversed) will give wrong readings as the thermocouple voltage will decrease with temperature.

Table 4: Typical thermocouple wire colors of Type-J and Type-K

Standard:	ANSI standard		IEC standard	
Thermocouple type	Thermocouple grade	Extension grade	Thermocouple grade	Intrinsically safe
J-type	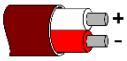	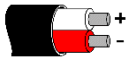		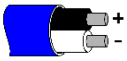
K-type	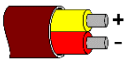	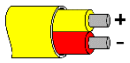	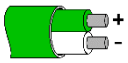	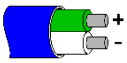
T-type	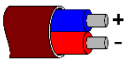	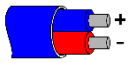	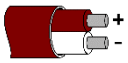	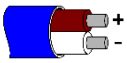
E-type	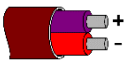	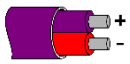	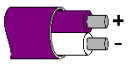	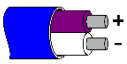
N-type	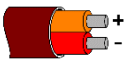	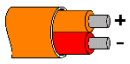	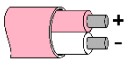	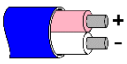

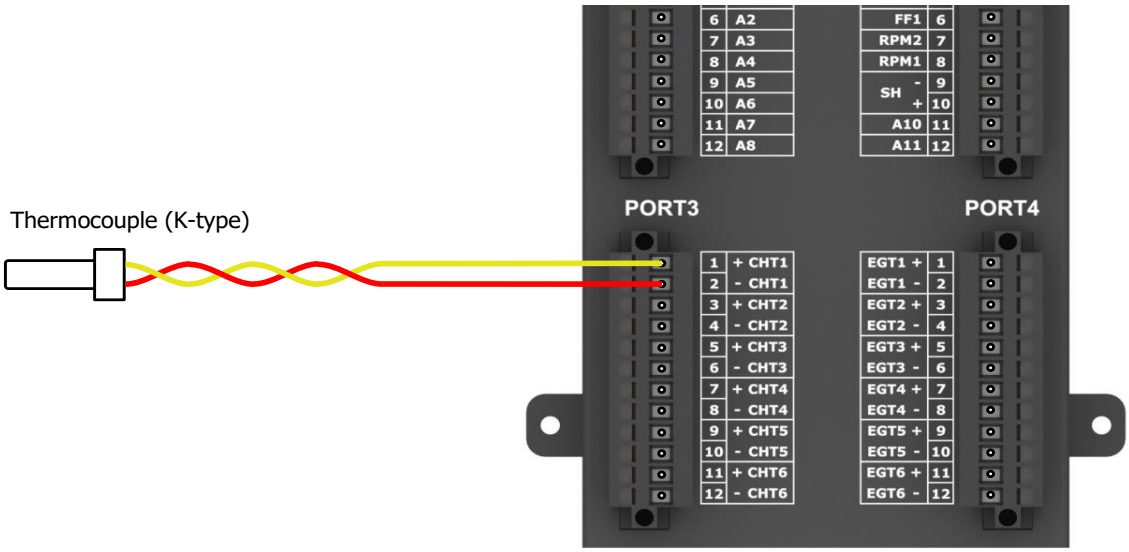

Figure 4: eBox - thermocouple connections (K-type illustrated)

2.3.2.2. Fuel flow

Fuel flow sensors have 3 wires and are active (they need +12V regulated power supply). On eBox, you can connect two fuel flow sensors to PORT2.5 and PORT2.6. Typical connections are shown in Figure 5.

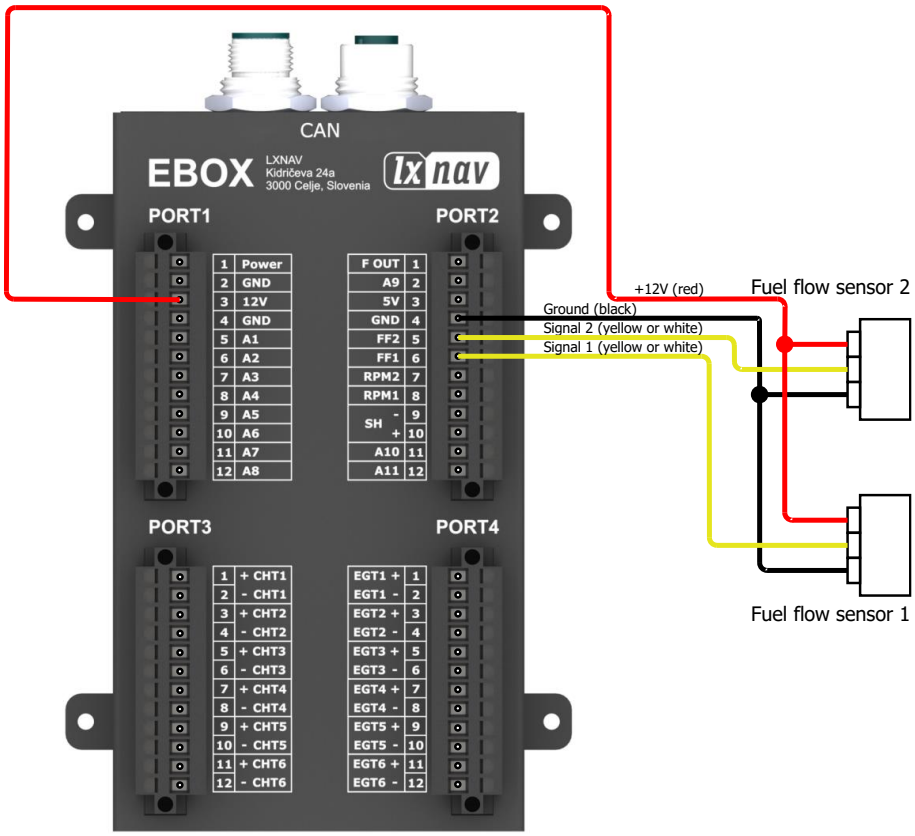

Figure 5: eBox - Fuel flow sensor connections

Most fuel flow sensors (Floscan 201, EI FT-60, etc.) have an open collector output. eBox has an internal 5.6kΩ pullup resistor, so any additional pullup resistors are not necessary. Use PORT1.3 and PORT2.4 for power connections (+12V and ground).

2.3.2.3. Fuel level

Figure 6 shows basic connections for resistive lever type fuel level sensor. These sensors usually have resistance range from 2-300Ω, so an external pullup resistor (220 Ω) must be installed.

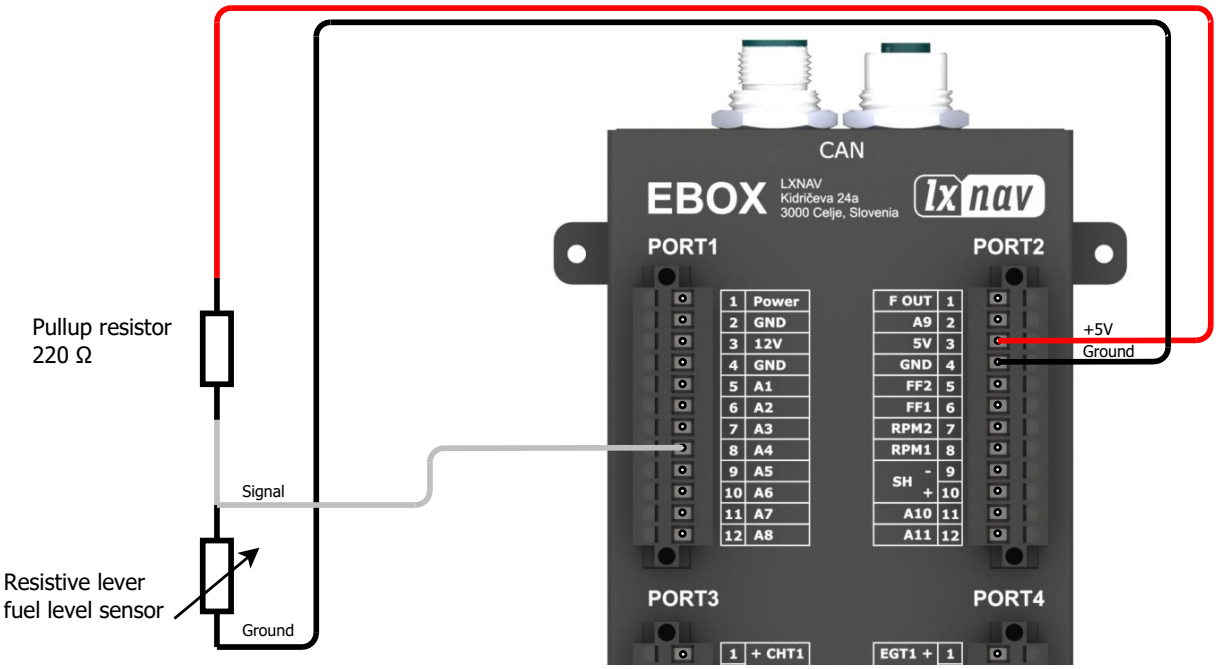

Figure 6: eBox - resistive lever fuel level sensor

I. Fuel level calibration

When calibrating fuel level sensors it is necessary to follow some rules. At the beginning, in eBox settings menu, go to pin, to which sensor is connected. Click EDIT, select type of sensor and CALIBRATE. This opens submenu for calibration. For the first time fuel tank has to be empty. When clicking on ADD PNT, eCopilot will store position of sensor at 0 liters. For each next calibration point, fill in tank 5 liters of fuel and repeat the process until the tank is full. Before pushing ADD PNT button wait for steady "Current voltage" number because of data filtering on such sensors (approximately 2 - 3 minutes). eCopilot automatically increments volume in steps of 5 liters, which is preferred by us, but user can edit all points with desired volume. Smaller steps are recommended due to the different shapes of tanks. When calibration is completed, close the dialog and settings are saved. If user thinks calibration is not enough precise, additional points can be inserted or deleted after calibration is completed.

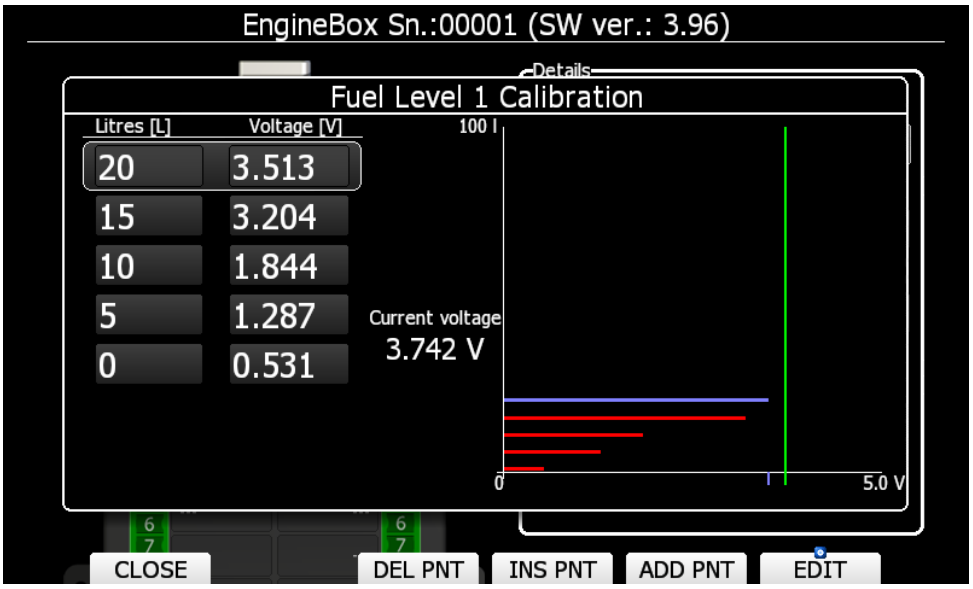

Figure 7: Example of calibrating the fuel level sensor

2.3.2.4. RPM

eBox has two inputs for RPM sensors: PORT2.8 (RPM1) and PORT2.7 (RPM2). RPM1 has an internal resistance of 100kΩ while RPM2 has 100Ω. They are designed for passive P-lead sensing, but with some external components, they can be used in other situations also.

RPM sensing is done in various way:

- Direct P-lead sensing from magnetos (Lyncoming, Continental) – Figure 8
- Active P-lead sensing from magnetos (JPI 420815) - Figure 9
- Passive P-lead sensing from magnetos (inductive pickup) - Figure 10

Direct P-lead sensing from magnetos is the least preferable way of measuring RPM (wiring shown on Figure 8). Because of high voltage spikes on magnetos, user must include a series resistor that has a value of 33kΩ. If the readings are unstable, the user must increase the value of the resistor (100kΩ or more) until the issue is resolved. Be sure to mount the resistors near the ignition switch, since magnetos are high voltage spikes that cause a lot of EM interference. This is the least preferable way of measuring RPM, because it does not isolate eBox from the damaging high voltage spikes generated on the magnetos.

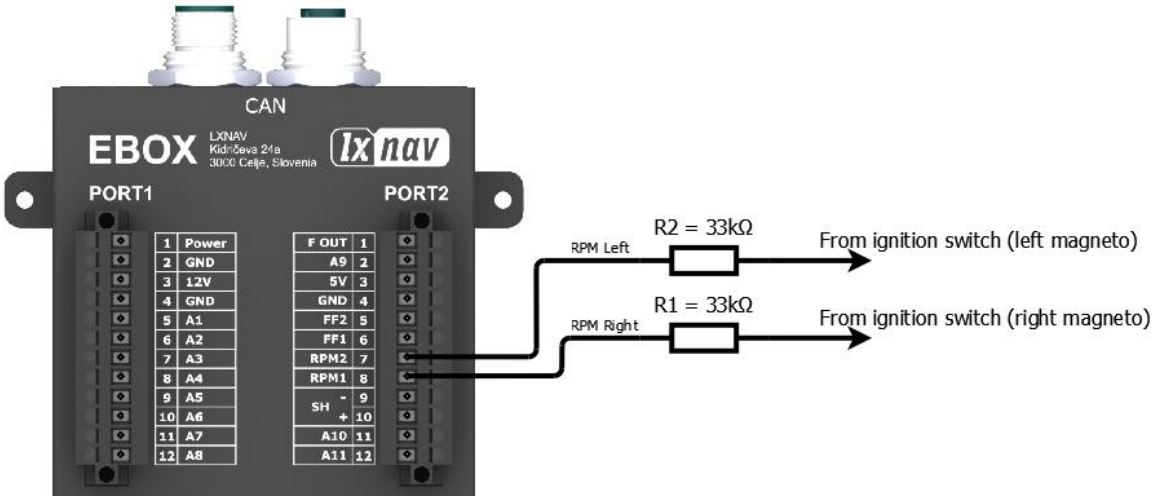

Figure 8: eBox - Direct P-lead sensing

Active P-lead sensing from magnetos is a preferred method of measuring RPM. Sensors like the JPI 420815 have a open-collector digital output (no high voltage spikes) and isolates the eBox from the magnetos. Figure 9 shows connection for such a sensor. Since RPM inputs on the eBox have no internal pullup, user must include a pullup 2.2kΩ to +12V.

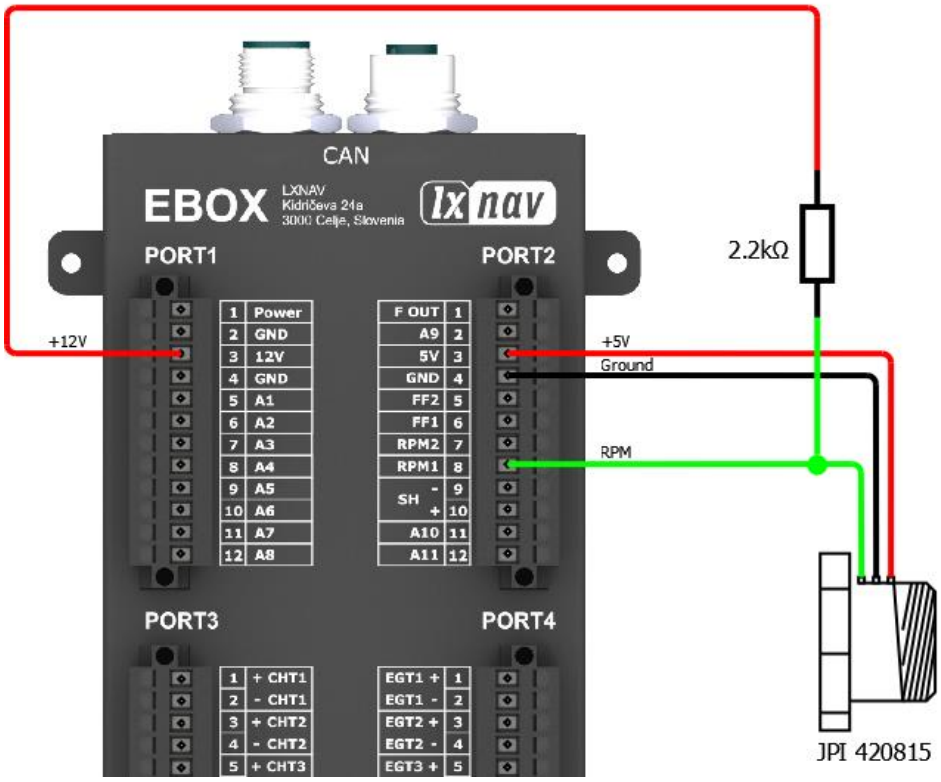

Figure 9: Active P-lead sensing from magnetos

Passive P-lead sensing is also a option for measuring RPM with eBox. A good example is the Rotax 912 which has a passive inductive pickup. Figure 10 shows the connections for this kind of sensing.

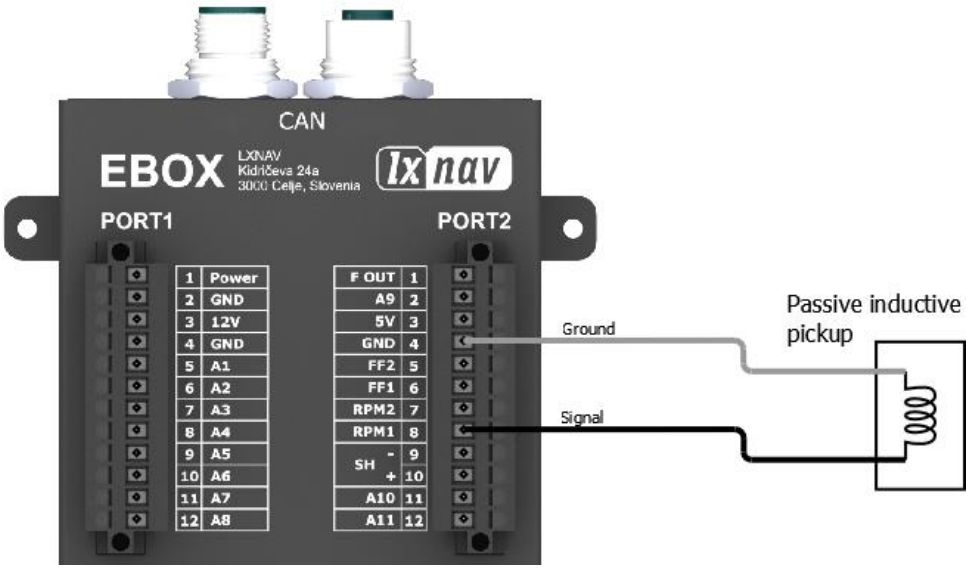

Figure 10: Passive P-lead sensing from magnetos

We tested Kelly dual magnetos and Slick 4347. With Kelly was the best resistor value for right magneto R1 = 29.2 kΩ and for left magneto R2 = 39.3 kΩ. With Slick single magneto this value was for R1 = 38.3 kΩ. Those values can also vary, even if the model type is the same.

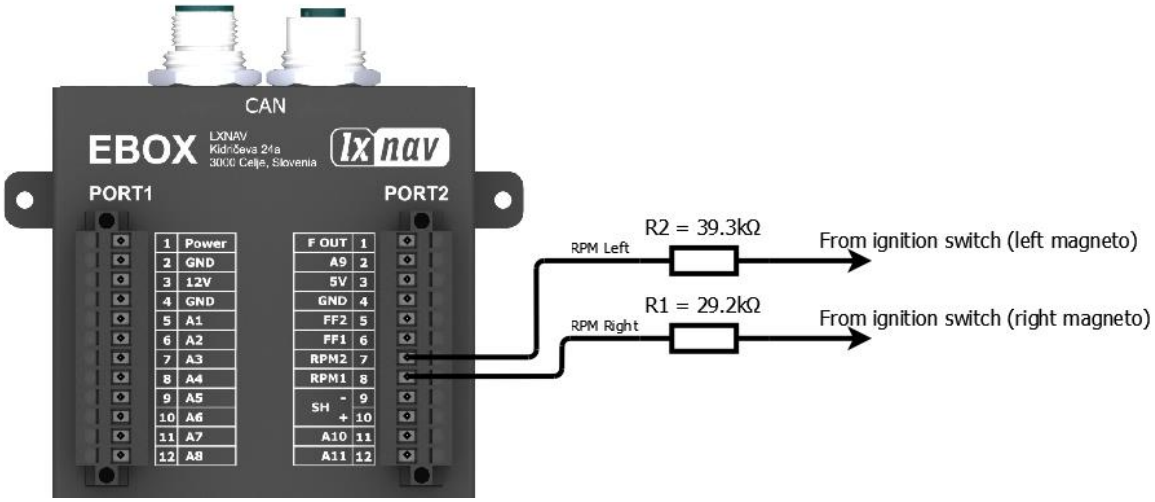

Figure 11: eBox - Direct P-lead sensing (Kelly magneto)

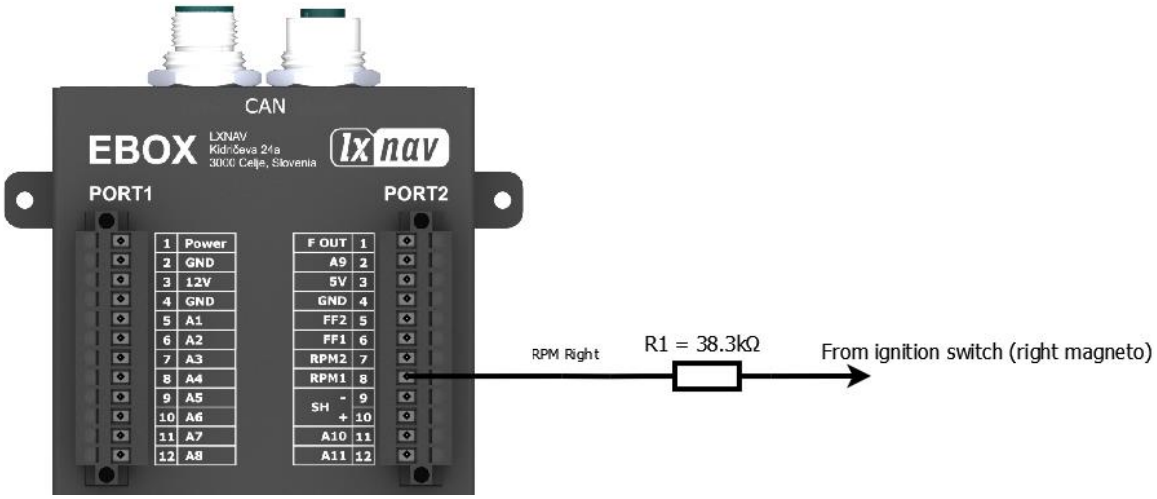

Figure 12: eBox - Direct P-lead sensing (Slick magneto)

2.3.2.5. Shunt

Shunt or current sense resistor has assigned differential pins on PORT2 labeled as SHUNT. Electrically it must be placed on high side, just after the main battery. When connecting to eBox take care for polarity. Wire pin SHUNT+ (PORT2.10) to shunt on battery side and SHUNT- (PORT2.9) to output of shunt. Both sense wires should be same length and connected directly to shunt. This enables more precise measurements.

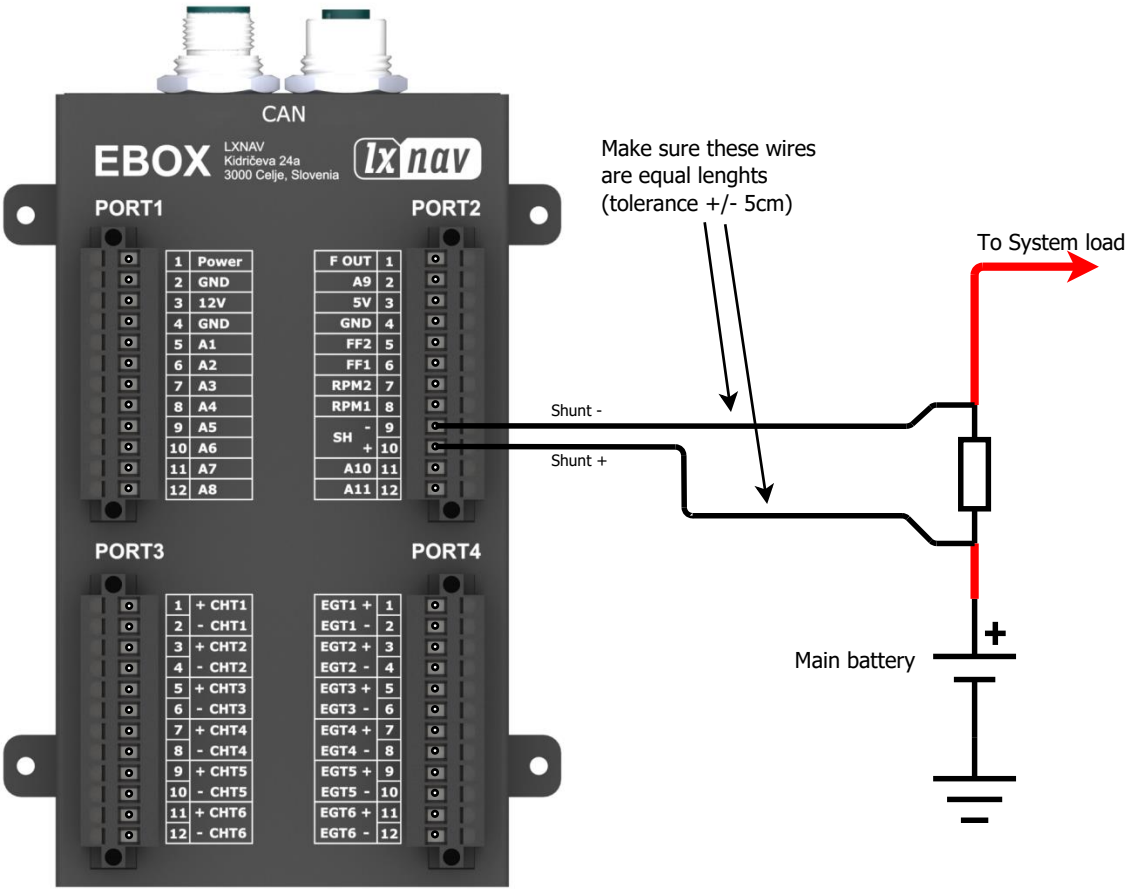

Figure 13: eBox- shunt connections

2.3.2.6. Oil pressure

Most oil pressure sensors are resistive type. Since their resistance is in the range of 10-500Ω, these sensors need an external pullup (recommended value 220Ω). Figure 14 shows typical connections for a resistive type oil pressure sensor (label Signal can be connected to ports A1-A11). If the sensor leads are not isolated (one of the leads is shorted to the enclosure of the sensor), please verify which of them is connected to ground and connect accordingly.

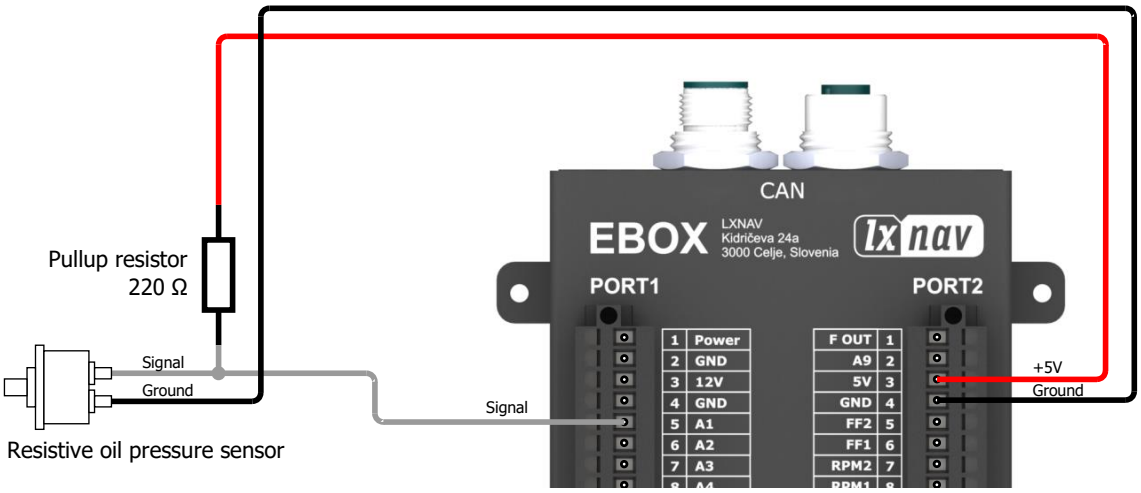

Figure 14: eBox - resistive oil pressure sensor connections

Some pressure sensors are current loop type (4-20mA). Figure 15 shows typical connections for these type of oil pressure sensors. Because most of these sensors work with a stable power supply (also cannot accept power supply voltage higher than 14V), eBox provides a +12V regulated power supply output. Since the output of these sensors is current, user must include a 220Ω pulldown resistor on the Signal line. This translates the current range 4-20mA to 0.88-4.4V voltage for the eBox.

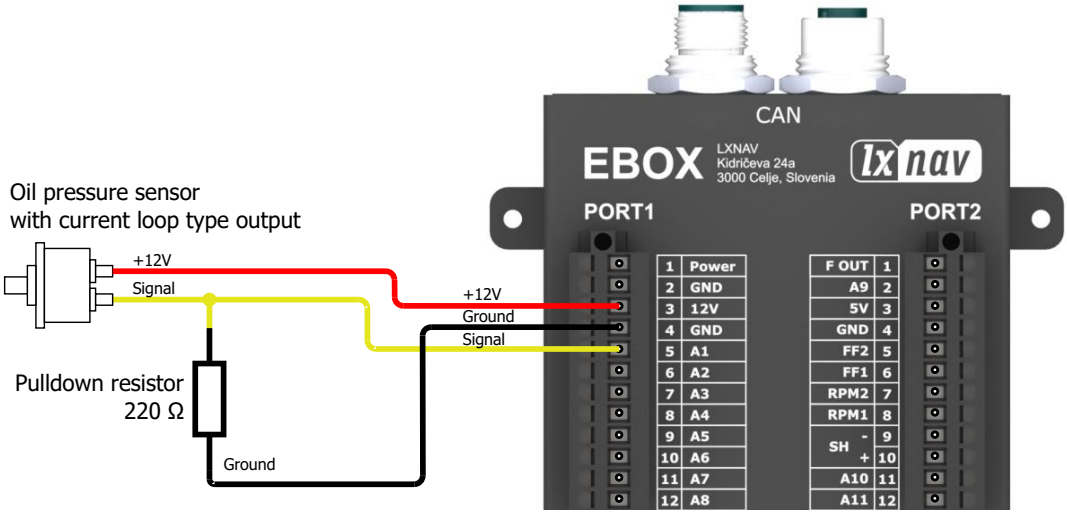

Figure 15: eBox - current loop type oil pressure sensor connections

2.3.2.7. Fuel pressure

Sensors for fuel pressure are typically the same type as the oil pressure sensors (resistive) and usually the only difference is the pressure range. For resistive wiring please see Figure 14.

2.3.2.8. Oil temperature

Oil temperature typically uses VDO resistive or thermocouple type sensors. For thermocouple type sensors, please refer to chapter 2.3.2.1.

Figure 16 shows connections for a VDO resistive type temperature sensor. Value of the pullup depends on which VDO temperature sensor is installed. From the VDO part number (located below the thread) the user can extract which temperature characteristic curve the sensor has (follow the link). User must include a 330Ω pullup resistor on the Signal line.

VDO Temperature sensor identification PDF (for reference):
https://www.vdo-gauges.com/media/instructions/TU00-0770-5104620%20Temperature%20Sensors_short_version.pdf

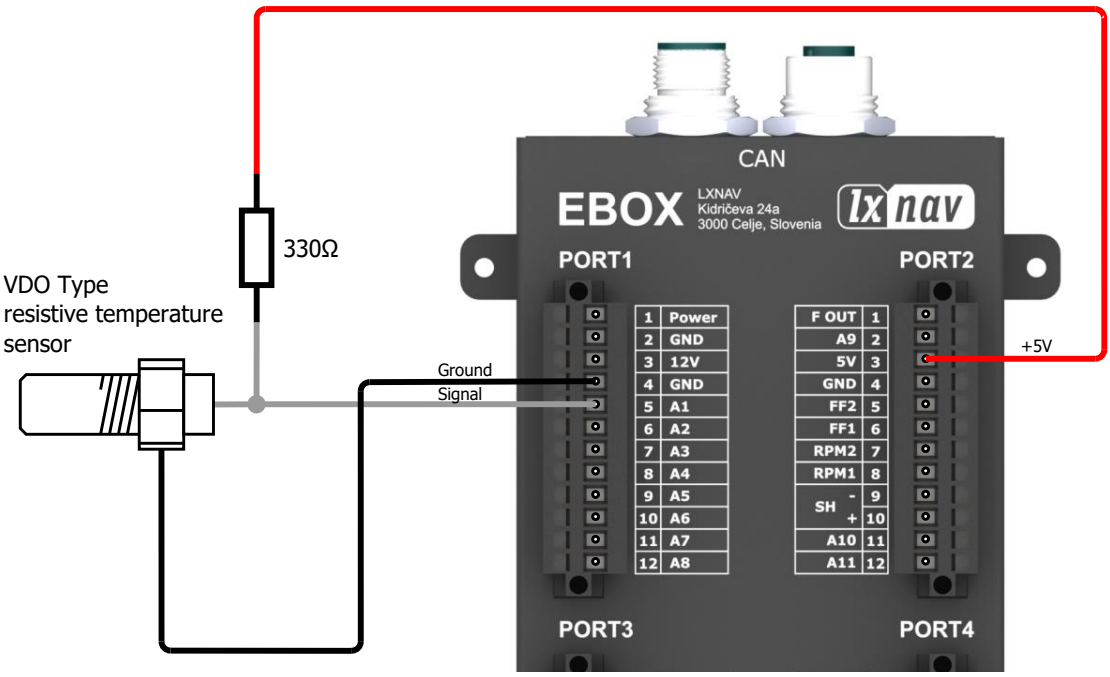

Figure 16: eBox – Oil temperature VDO type resistive sensor connections

2.3.2.9. Outside air temperature (OAT)

Outside air temperature is typically measured with a resistive type sensor (PTC or NTC thermistor) or a thermocouple type sensor. For thermocouple connections please refer to chapter 2.3.2.1.

They can be connected to any free CHT or EGT port on PORT3 or PORT4. Figure 17 shows the connections for a generic resistive type temperature sensor. They can be connected to any of the A1-A11 ports.

For sensors that have a resistance range up to 1000Ω, a 330Ω pullup resistor must be included. For sensors that have a resistance range from 1000Ω upward, the internal pullup resistor in eBox can be used (5.6kΩ). In that case, do not wire resistor as shown on Figure 17.

Same wiring with external pull-up, as on Figure 17, can be used for LM335 temperature sensor. Wire positive pin of LM335 "+" to analog input and resistor, negative pin " - " to ground terminal and leave "ADJ" unconnected. Use pull-up in size of 1kΩ.

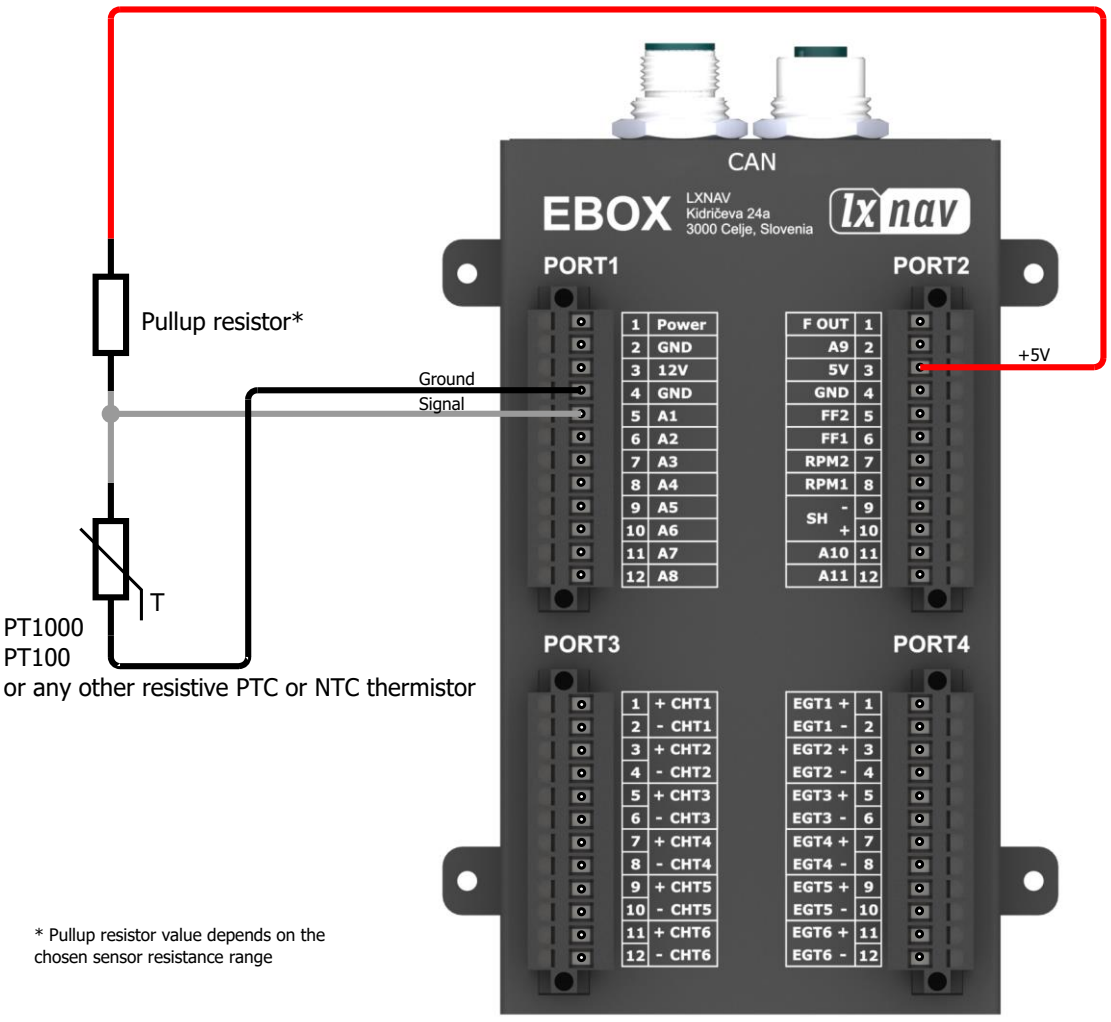

Figure 17: eBox – OAT resistive type sensor connections

2.3.2.10. Manifold pressure sensor

Manifold pressure sensors are typically active 3 or 4 wire sensors that have a voltage output that is linearly proportional to the measured pressure.

Active 3-wire sensors have a 0.5-4.5V output. If you measure 0V or 5V on this kind of sensor that means something is wrong with the sensor.

Active 4-wire sensors (like JPI 604010) have a differential output. The true voltage, that represents manifold pressure, is measured between Signal+ (white) and Signal- (green) (typically not more than 100mV). While the voltage difference between these signals is 100mV maximum, the common-mode voltage (voltage between ground and Signal+ or Signal-) is typically 2.5V. These facts can be taken into account when troubleshooting.

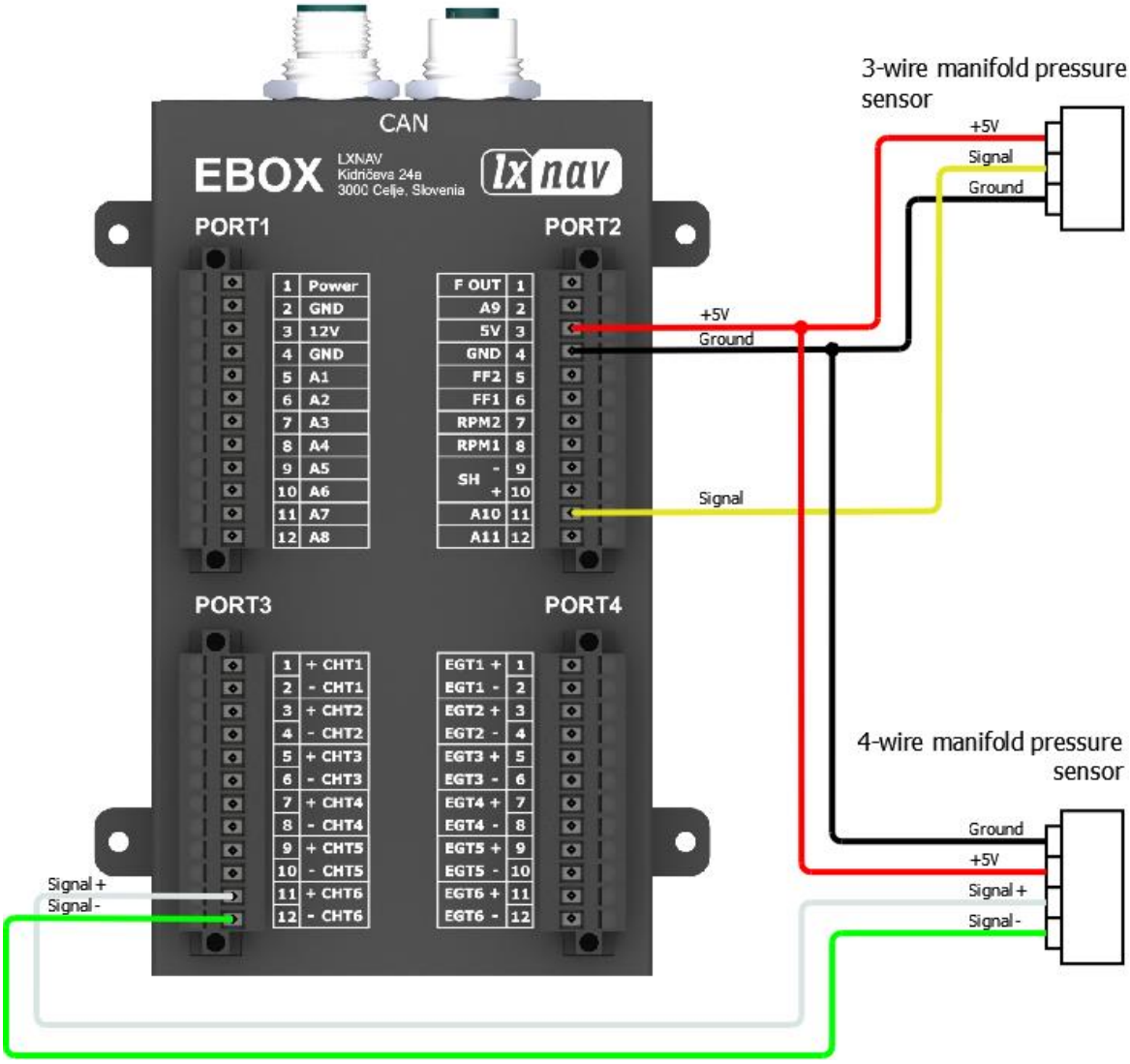

Figure 18: eBox - manifold pressure sensor connections

2.3.2.11. Lambda controller

Lambda controller (for example AFR500), has dedicated analog output for such devices as eBox. It has two wires from which both of them should be connected to eBox for exact measurements. One of them is signal and the other is ground return path.

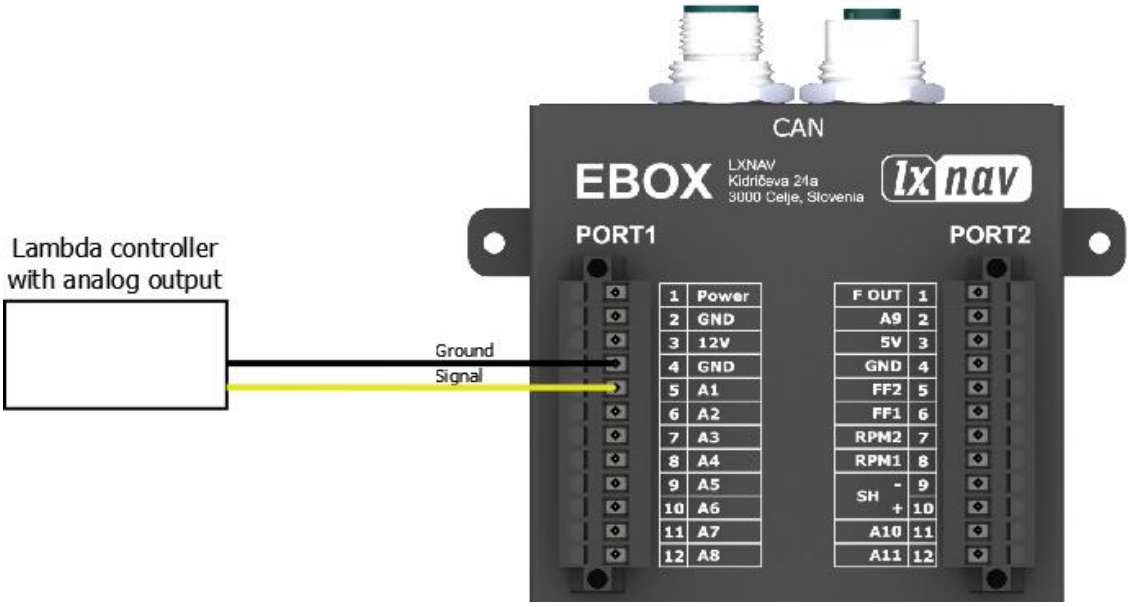

Figure 19: eBox - lambda controller

2.3.3. CAN bus

eBox uses two standard male and female NMEA M12 connectors for CAN bus with pass through function. That means that the communication and power lines go from one connector to the other. Usually this is for connection to CAN bus used by the male connector on each device. Female is for extensions (splitter). CAN terminator should be mounted on each end of the bus in order to ensure proper bus impedance termination (60Ω). Without them communication could produce errors on bus and transfer would not be successful between systems. Also check that all connectors are well fitted together.

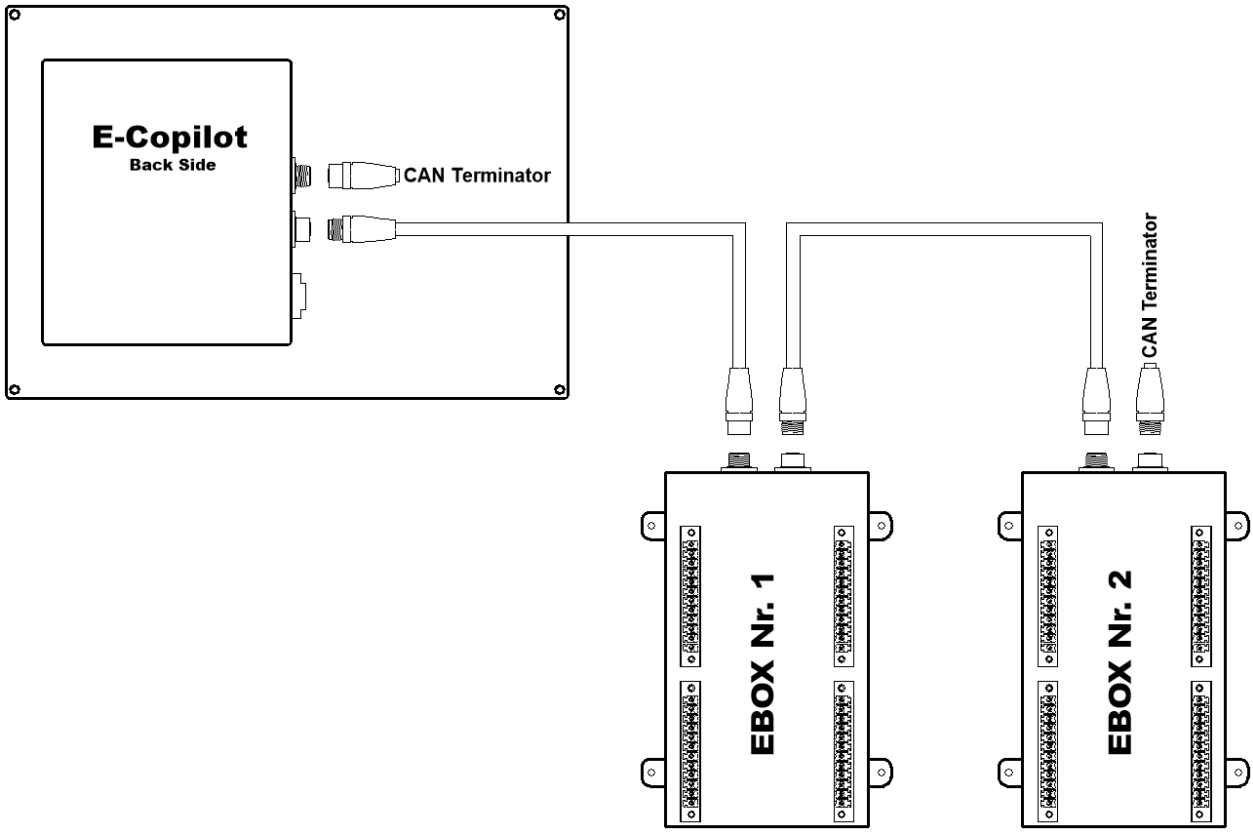

Figure 20: CAN communication between eCopilot and eBox

Table 5: Pinout of 5-pin M12 CAN connector

Pin	Type	Description
1	Shield	shield
2	PWR	positive power supply
3	GND	ground
4	CAN-H	CAN high signal line
5	CAN-L	CAN low signal line

2.4. Dimensions

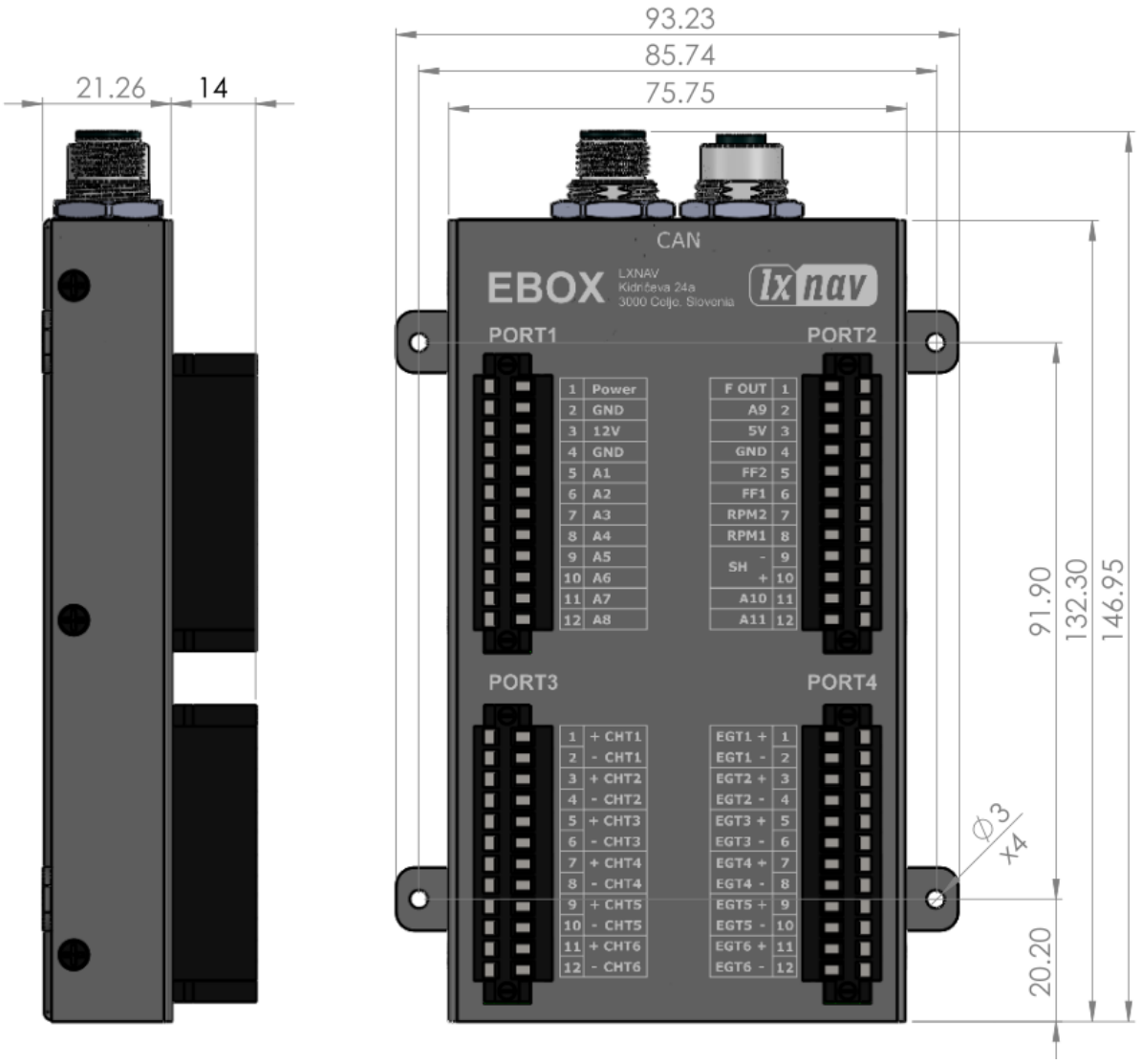

Drawing is not to scale

Figure 21: eBox - drawing with annotations

2.4.1. Mounting requirements

Ebox is designed for mounting to a flat surface with four M3 screws and self-locking nuts. It should be firmly fitted to a solid surface. Take caution to leave enough space on side of Ebox so you can later screw CAN connectors together.

2.5. Functionality check

Before powering eCopilot:

- Check all wires and cables that they sit firmly in their position
- Make sure that the input power polarity is correct (PORT1.1 and PORT1.2)
- Make sure that the headers on top are screwed in, so they can't fall out

After overview, turn power on to eCopilot and eBox. Wait for eCopilot to start and then go to "Setup" menu and submenu "Hardware". When you enter, you should see eBox with the serial number. This means, that eBox has been recognized by eCopilot. If you enter, you can edit configuration for each pin on eBox and see current values of sensors.

2.6. Configuring sensors in eBox menu on eCopilot

All sensors connected to eBox should be configured also on eCopilot. This is done via Setup menu "Hardware->EngineBox Sn.:xxxxx", where user goes to each position of sensor, select "Sensor type" and "Sensor model" (Figure 22, Figure 23, Figure 24, Figure 25). Last thing user should do is to set the period of time with which user wish to receive data from sensor (Figure 26). Time period could be between 0.00 and 10,000.00 ms in intervals of 50 ms. If period is set to zero, eBox will not send any data from particular port. State of this pin is set as "disabled". If there is need of high refresh rate for sensor, period should be lower. But recommended value is 250 ms and more to free CAN bus from heavy load. When sensor is configured, Its value will be displayed under Current value box (Figure 27). In following figures are step by step instructions how to configure EGT thermocouple sensor type K.

Figure 22: Step 1: In Setup menu go to Hardware submenu

Figure 23: Step 2: Select EngineBox with appropriate serial number

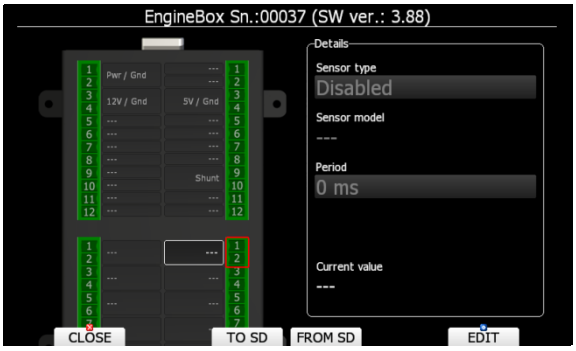

Figure 24: Step 3: select populated pins and click EDIT button

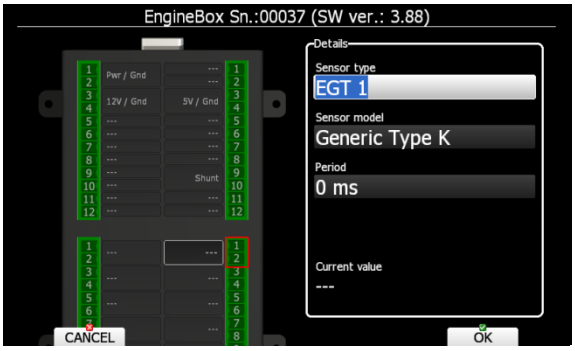

Figure 25: Step 4: Find right Sensor type by scrolling right button and if needed, also Sensor model in box bellow

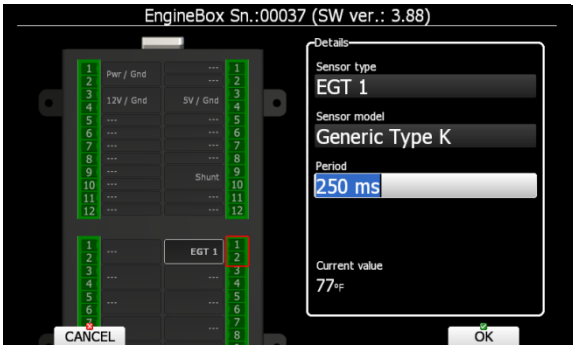

Figure 26: Step 5: Set time period between 50 and 10.000 ms. Prefered is 250 ms and more

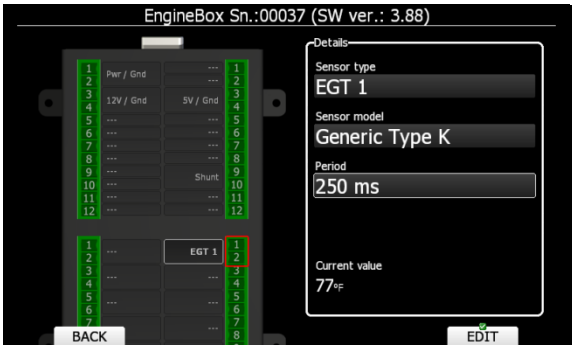

Figure 27: Step 6: Check Current value of fully configured EGT sensor

2.7. Updating firmware of eBox

Firmware updates can be done via eCopilot. Start all units and go to "Setup" menu in eCopilot. Select "Password" option and type in "89891" then press "Enter". eCopilot will automatically search for updates on root of SD card. If there is only one update file it will be automatically selected, otherwise choose update file manually.

2.8. Compatible sensors

Please use the tables below, to refer to wiring figures for particular sensors. A lot of the sensor models share the same wiring diagram, so read the corresponding chapter carefully. However it is mandatory to check power requirements for each sensor. It may

Table 6: Fuel flow sensors

Model	Wiring	Notes
Floscan 201	Figure 5	3-wire open-collector output sensor, must be powered from PORT1.3, external pull-up 5600Ω to 12V
EI FT-60 (Red cube)	Figure 5	3-wire open-collector output sensor, must be powered from PORT1.3, external pull-up 5600Ω to 12V

Table 7: Fuel level sensors

Model	Wiring	Notes
Road 3-180Ω lever type sensor	Figure 6	2-wire resistive output sensor
Generic voltage output sensors	Figure 18	3-wire voltage output sensor, no pull-up
Generic resistive output sensors	Figure 16	2-wire resistive output sensor, internal pull-up

Table 8: RPM sensors

Model	Wiring	Notes
JPI 420815	Figure 9	3-wire open-collector output sensor, external pull-up 2200Ω to 12V
MGL Avionics Tach Sender	Figure 9	3-wire open-collector output sensor, external pull-up 5600Ω to 12V

Table 9: Temperature sensors

Model	Wiring	Notes
All VDO temperature sensors	Figure 16	2-wire resistive output sensor, external pull-up 330Ω to 5V
Dynon OAT	Figure 16	2-wire resistive output sensor, internal pull-up
Dynon 100409	Figure 16	2-wire resistive output sensor, external pull-up 330Ω to 5V
KTY	Figure 16	2-wire resistive output sensor, internal pull-up
LM335	Figure 17	2-wire resistive output sensor, external pull-up 1000Ω to 5V
NTC10000	Figure 17	2-wire resistive output sensor, internal pull-up
PT100	Figure 17	2-wire resistive output sensor, external pull-up 330Ω to 5V
PT1000	Figure 17	2-wire resistive output sensor, internal pull-up
Road TC10	Figure 16	2-wire resistive output sensor, internal pull-up
Rochester 3080-37	Figure 16	2-wire resistive output sensor, external pull-up 330Ω to 5V
Rotax 965531	Figure 16	2-wire resistive output sensor, internal pull-up
Thermocouple Type-J and Type-K	Figure 4	2-wire thermocouple output sensor, no pull-up
Westach 399S9	Figure 16	2-wire resistive output sensor, external pull-up 330Ω to 5V

Table 10: Pressure sensors

Model	Wiring	Notes
All VDO pressure sensors	Figure 14	2-wire resistive output sensor, external pull-up 220Ω to 5V
Dynon manifold pressure sensor	Figure 18	3-wire voltage output sensor, no pull-up

Generic pressure sensor with voltage output (0-5V)	Figure 18	3-wire voltage output sensor, no pull-up
JPI 604010	Figure 18	4-wire differential voltage output sensor, no pull-up
Kavlico P4055 0-15 PSI	Figure 18	3-wire voltage output sensor, no pull-up
Kavlico P4055 0-50 PSI	Figure 18	3-wire voltage output sensor, no pull-up
Kavlico P4055 0-150 PSI	Figure 18	3-wire voltage output sensor, no pull-up
Keller PA21Y	Figure 15	2-wire current output sensor, external pull-down 220Ω
Road P906.B001.0S	Figure 18	3-wire voltage output sensor, no pull-up
Rotax BRP459180	Figure 15	2-wire current output sensor, external pull-down 220Ω

Table 11: Lambda sensors

Model	Wiring	Notes
AFR500	Figure 19	2-wire voltage output sensor, no pull-up

Table 12: Current flow sensors

Model	Wiring	Notes
MGL Avionics +-120 A	Figure 18Figure	3-wire voltage output sensor, must be powered from PORT1.3, no pull-up

Table 13: Misc. sensors

Model	Wiring	Notes
Trimmers with analog output 0 – 5 V	Figure 18	2 or 3 wires, no pull-up
GPI fuel tank selector switch	Figure 19	2-wire, internal pull-up

2.9. Troubleshooting

- eCopilot is not receiving data from eBox

  Check CAN bus and power connections. Be sure that CAN bus line is terminated at both ends and connectors are firmly tied together.

- eBox is not reading sensor(-s)

  Check the cable insulation. Make sure, that only conductive part of cable is inserted. Otherwise look into setting menu for eBox if sensor is set to right pin.

- Wrong reading of sensors

  Be sure that eBox and sensors have really same ground connection. It is best to use power pins for sensors directly on eBox. Otherwise use power splitter near it. You can also check if the right sensor type is selected in settings menu on eCopilot.

3. Revision History

Date	Revision	Description
August 2016	#1	Initial release of installation manual
February 2017	#1.1	Modified color table for thermocouples. Examples for wiring Kelly and Slick magnetos. Reviewed/updated/added chapter 2.6, 2.8, 2.9
March 2017	#1.2	Modified Figure 10
April 2017	#1.3	Added chapter 2.6 Added support for LM335 temperature sensor Changed value of pull-up resistor on Figure 9 from 5.6kΩ to 2.2kΩ
June 2017	#1.4	Added support for new sensors: NTC10000, Rotax BRP 459180, Kavlico P4055 0-15 psi
August 2017	#1.5	Added support for new sensors: Westach 399S9, MGL Avionics current and RPM sensor, Dynon 100409, KTY Modified chapters: 2.3, 2.8